Fairview Microwave
RF COMPONENTS ON DEMAND. Done!

SA6TMTF100W-06
DATA SHEET

6 dB Fixed Attenuator TNC Male To TNC Female Directional Up To 6 GHz Rated To 100 Watts With Black Aluminum Heatsink Body

Electrical Specifications*

Description	Min	Typ	Max	Units
Frequency Range	DC		6	GHz
Impedance		50		Ohms
Attenuation Value		6		dB
Input Power			100	Watts
VSWR			1.45:1	

* Values at 25°C, sea level

Specifications by Frequency

Description	F1	F2	F3	F4	F5	Units
Range	DC to 2	2 to 4	4 to 6			GHz
VSWR	1.2:1	1.35:1	1.45:1			
Atten. Accuracy	± 0.75	± 0.75	± 1			dB

Features:

- Design: Fixed, Directional Attenuator
- Connector 1: TNC Male
- Connector 2: TNC Female
- Body Material and Plating: Black Anodized Aluminum Heatsink

Mechanical Specifications

Temperature

Operating Range -55 to +125 deg C

Size

Length 4.9 in [124.46 mm]
Width 3.8 in [96.52 mm]
Height 2.7 in [68.58 mm]

Weight 3 lbs [1.36 Kg]

Connectors

Description	Connector 1	Connector 2
Type	TNC Male	TNC Female
Contact Material & Plating	Beryllium Copper, Gold	Beryllium Copper, Gold
Coupling Nut Material & Plating	Stainless Steel, Passivated	
Body Material & Plating	Stainless Steel, Passivated	Stainless Steel, Passivated

Compliance Certifications (visit www.FairviewMicrowave.com for current document)

Plotted and Other Data

Notes:
- Values at 25 °C, sea level

Fairview Microwave
1130 Junction Dr. #100
Allen, TX 75013
Tel: 1-800-715-4396 / (972) 649-6678
Fax: (972) 649-6689
www.fairviewmicrowave.com
sales@fairviewmicrowave.com

Copyright © 2014

6 dB Fixed Attenuator TNC Male To TNC Female Directional Up To 6 GHz Rated To 100 Watts With Black Aluminum Heatsink Body from Fairview Microwave is in-stock and available to ship same-day. All of our RF/microwave products are available off-the-shelf from our ISO 9001:2008 certified facilities in Allen, Texas. Fairview Microwave is RF on-demand.

For additional information on this product, please click the following link: 6 dB Fixed Attenuator TNC Male To TNC Female Directional Up To 6 GHz Rated To 100 Watts With Black Aluminum Heatsink Body SA6TMTF100W-06

URL: http://www.fairviewmicrowave.com/6db-fixed-attenuator-tnc-male-tnc-female-100-watts-sa6tmtf100w-06-p.aspx

The information contained in this document is accurate to the best of our knowledge and representative of the part described herein. It may be necessary to make modifications to the part and/or the documentation of the part, in order to implement improvements. Fairview Microwave reserves the right to make such changes as required. Unless otherwise stated, all specifications are nominal. Fairview Microwave does not make any representation or warranty regarding the suitability of the part described herein for any particular purpose, and Fairview Microwave does not assume any liability arising out of the use of any part or documentation.

Add to end of part number	
- yy =	Attenuation
- 03	3 dB
- 06	6 dB
- 10	10 dB
- 20	20 dB
- 30	30 dB
- 40	40 dB
- 50	50 dB
- 60	60 dB

Part Number Configuration		
Part Number	Input Connector	Output Connector
SA6DFDM100W	7/16 Female	7/16 Male
SA6DMDF100W	7/16 Male	7/16 Female
SA6DFDF100W	7/16 Female	7/16 Female
SA6NFNM100W	N Female	N Male
SA6NMNF100W	N Male	N Female
SA6NFNF100W	N Female	N Female
SA6SFSM100W	SMA Female	SMA Male
SA6SMSF100W	SMA Male	SMA Female
SA6SFSF100W	SMA Female	SMA Female
SA6TFTM100W	TNC Female	TNC Male
SA6TMTF100W	TNC Male	TNC Female
SA6TFTF100W	TNC Female	TNC Female

Table of Information	
Connector Type	DIM "A" (REF.)
SMA Male	0.7800
SMA Female	0.6300
TNC Male	0.9600
TNC Female	1.0600
N Female	1.0900
N Male	1.1300
7/16 Male	1.2800
7/16 Female	1.3200

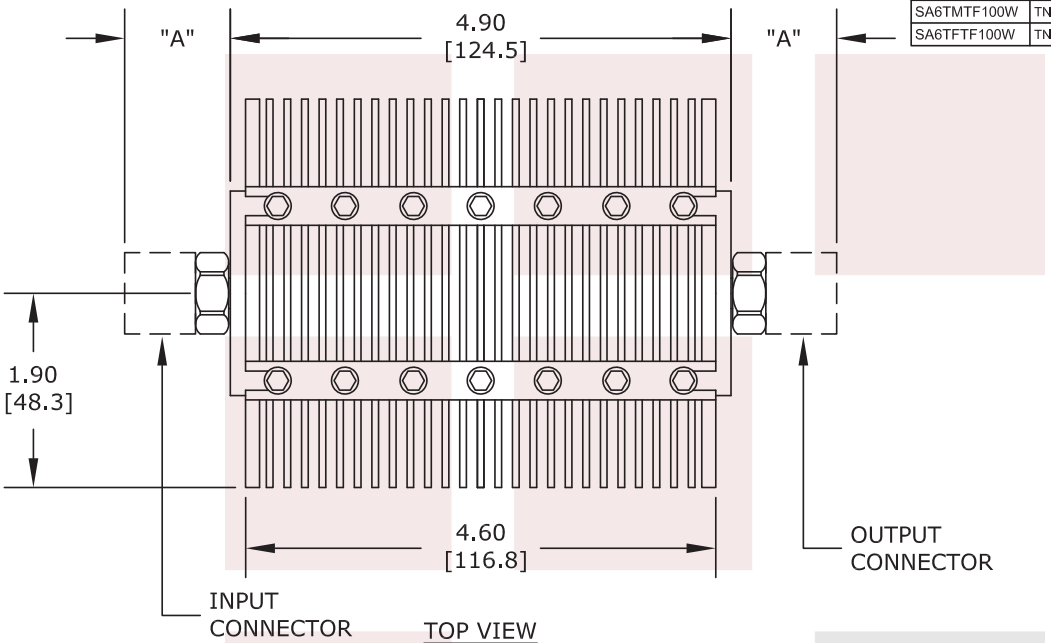

TOP VIEW

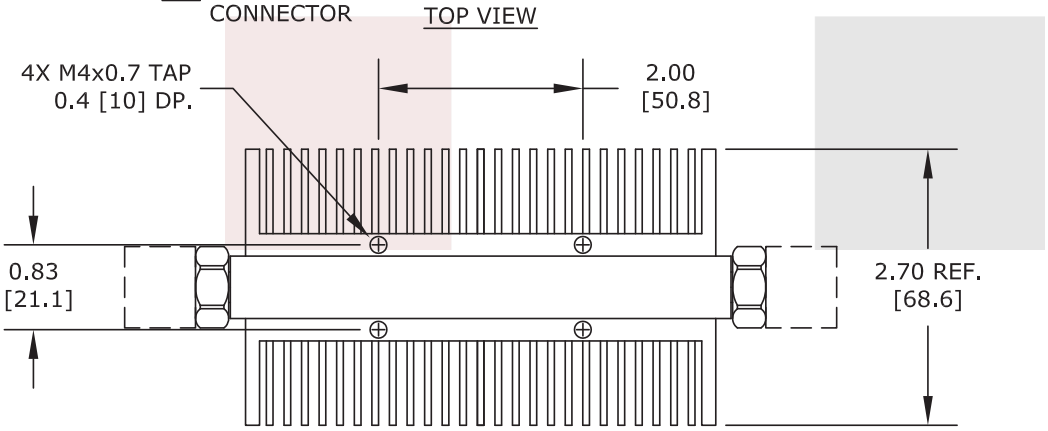

SIDE VIEW

FAIRVIEW MICROWAVE INC. ALLEN, TX 75013 WWW.FAIRVIEWMICROWAVE.COM	NOTES: 1. UNLESS OTHERWISE SPECIFIED ALL DIMENSIONS ARE NOMINAL. 2. ALL SPECIFICATIONS ARE SUBJECT TO CHANGE WITHOUT NOTICE AT ANY TIME. 3. DIMENSIONS ARE IN INCHES [mm].				
TITLE 6 dB Fixed Attenuator TNC Male To TNC Female Directional Up To 6 GHz Rated To 100 Watts With Black Aluminum Heatsink Body	DWG NO SA6XXXX100w-yy		CAGE CODE 3FKR5		
	CAD FILE 062714	SHEET	SCALE N/A	SIZE A	2233

1130 Junction Dr. #100 Allen, TX 75013 | Tel: 1-800-715-4396 / (972) 649-6678 / Fax: (972) 649-6689

Copyright © 2014