Fairview Microwave
RF COMPONENTS ON DEMAND. Done!

FMSW6105
DATA SHEET

SPDT Failsafe Electro-Mechanical Relay Switch From DC to 40 GHz, 10 Watts with Indicators, TTL, Diodes, 2.92mm

The FMSW6105 is an SPDT Electromechanical Relay Switch that operates over a wide frequency band from DC to 40 GHz and has a rating of 10 Watts input power (CW). Rated for 1M life cycles for high reliability operation, this design uses a Failsafe Actuator with a break before make configuration, TTL logic driver, position indicators and suppression diodes. The switch exhibits exceptional electrical performance specified from 0.2 dB max for insertion loss and 70 dB min for isolation, and guaranteed over -35°C to +85°C. The assembly requires an operating voltage of +28Vdc. External connectors include solder terminals and 2.92mm female connectors.

Electrical Specifications

Switch Type	SPDT, Reflective
Actuator Type	Failsafe
Switching Sequence	Break Before Make
Actuator Options	Indicators, TTL Logic, Diodes
TTL Control	on: 2.4 to 5 Volts off: 0 to 0.8 Volts

Description	Min	Typ	Max	Units
Frequency Range	DC		40	GHz
Impedance		50		Ohms
Operating Voltage	24	28	30	Volts
Actuating Current @ 28 Volts			160	mA
VSWR			1.9:1	
Insertion Loss			0.8	dB
Isolation	50			dB
Input Power (CW) (at 40 GHz)			10	Watts

Performance by Frequency

Description	F1	F2	F3	F4	F5	Units
Frequency Range	DC - 6	6 - 12	12 - 18.5	18.5 - 26.5	26.5 - 40	GHz
VSWR, Max	1.3:1	1.4:1	1.5:1	1.7:1	1.9:1	
Insertion Loss, Max	0.2	0.4	0.5	0.7	0.8	dB
Isolation, Min	70	60	60	55	50	dB

Mechanical Specifications

Size

Length	1.92 in [48.77 mm]
Width/Diameter	1.5 in [38.1 mm]
Height	0.52 in [13.21 mm]
Weight	0.132 lbs [59.87 g]
Body Material and Plating	Aluminum
Package Type	Connectorized Module
Operating Life	1,000,000 Cycles
Switching Time	15 ms Max

Features:

- Single Pole Double Throw Relay Switch
- DC to 40 GHz Frequency Range
- 1M Cycle Operating Life Min
- Failsafe Actuator
- TTL Logic Driver, Position Indicators, Suppression Diodes
- Insertion Loss 0.8 dB max
- Isolation 50 dB min
- 10 Watts Avg Power Max
- Switching Sequence Break Before Make

Applications:

- Test & Measurement
- Communications System
- Instrumentation

Fairview Microwave
1130 Junction Dr. #100
Allen, TX 75013
Tel: 1-800-715-4396 / (972) 649-6678
Fax: (972) 649-6689
www.fairviewmicrowave.com
sales@fairviewmicrowave.com

Copyright © 2016

Connectors

RF Connector Type	2.92mm Female
RF Connector Contact Material & Plating	Beryllium Copper, Gold
RF Connector Body Material & Plating	Passivated Stainless Steel
Control Connector	Solder Pin

Environmental Specifications

Temperature

Operating Range	-35 to +85 deg C
ESD Sensitivity	ESD Sensitive Material. Transport material in Approved ESD bags. Handle in approved ESD Workstation.

Environmental Specification Notes:
Designed to Meet MIL-DTL-3928

Compliance Certifications (visit www.FairviewMicrowave.com for current document)

Not RoHS Compliant

Plotted and Other Data

Notes:

Copyright © 2016

Typical Performance Data

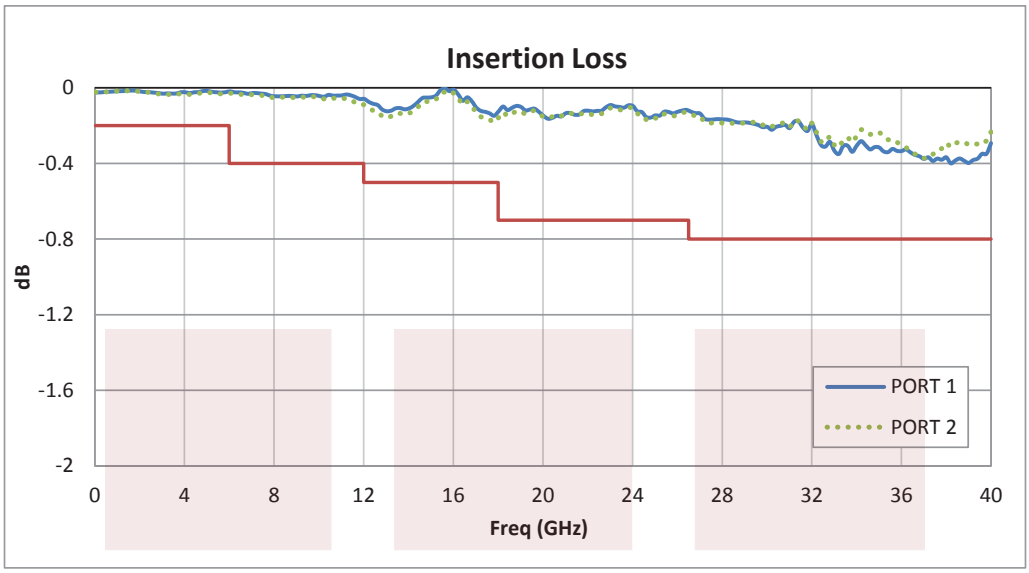

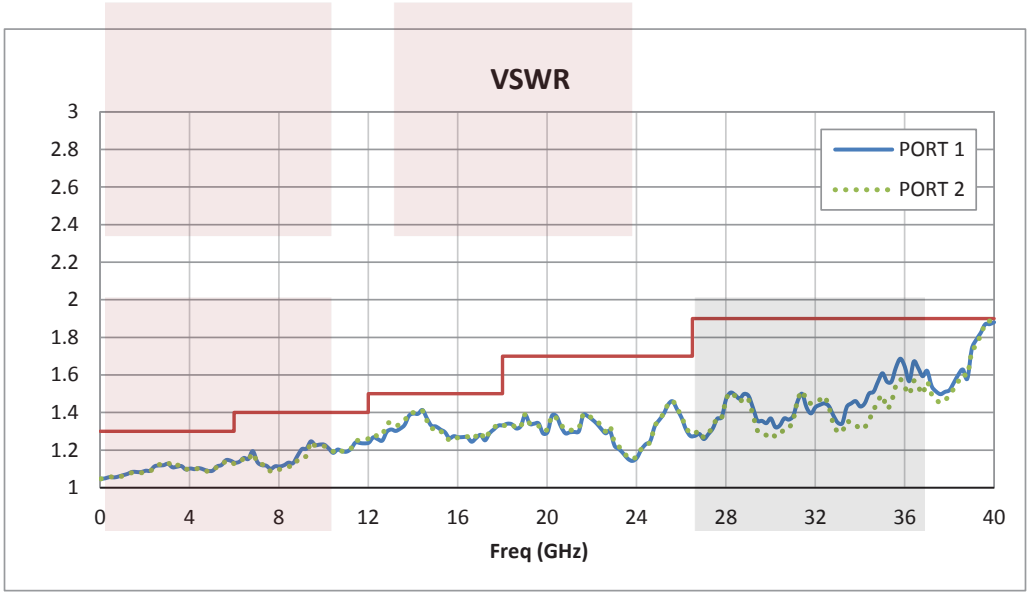

Copyright © 2016

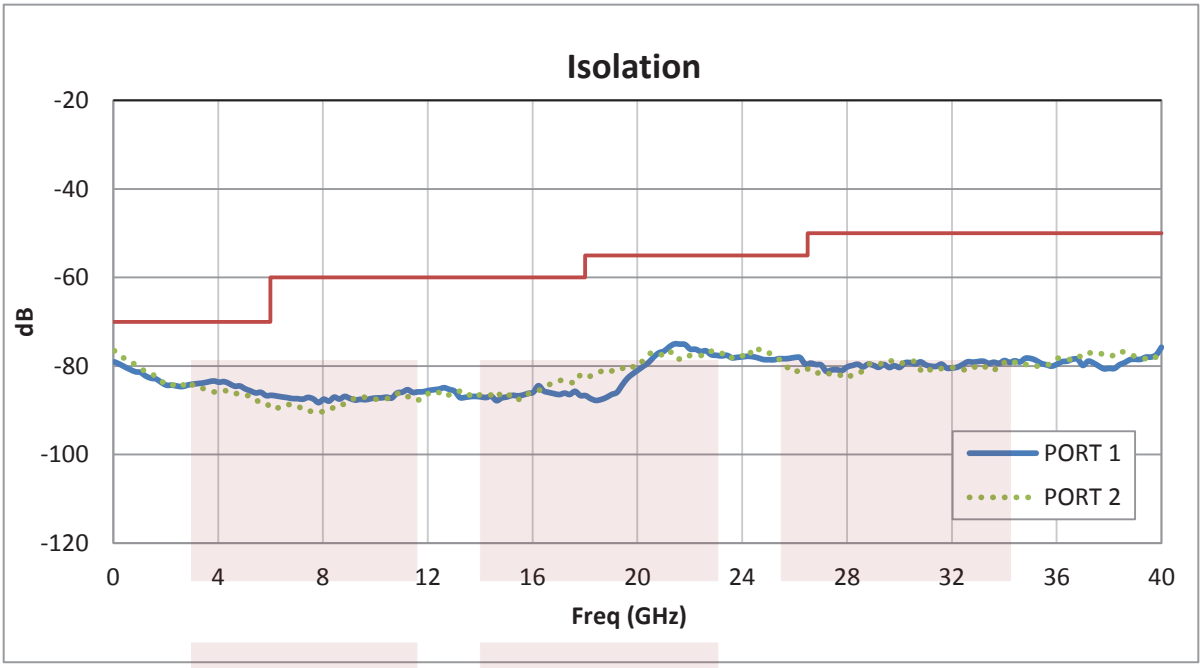

SPDT Failsafe Electro-Mechanical Relay Switch From DC to 40 GHz, 10 Watts with Indicators, TTL, Diodes, 2.92mm from Fairview Microwave is in-stock and available to ship same-day. All of our RF/microwave products are available off-the-shelf from our ISO 9001:2008 certified facilities in Allen, Texas. Fairview Microwave is RF on-demand.

For additional information on this product, please click the following link: SPDT Failsafe Electro-Mechanical Relay Switch From DC to 40 GHz, 10 Watts with Indicators, TTL, Diodes, 2.92mm FMSW6105

URL: http://www.fairviewmicrowave.com/spdt-failsafe-electro-mechanical-relay-switch-indicators-ttl-fmsw6105-p.aspx

The information contained in this document is accurate to the best of our knowledge and representative of the part described herein. It may be necessary to make modifications to the part and/or the documentation of the part, in order to implement improvements. Fairview Microwave reserves the right to make such changes as required. Unless otherwise stated, all specifications are nominal. Fairview Microwave does not make any representation or warranty regarding the suitability of the part described herein for any particular purpose, and Fairview Microwave does not assume any liability arising out of the use of any part or documentation.

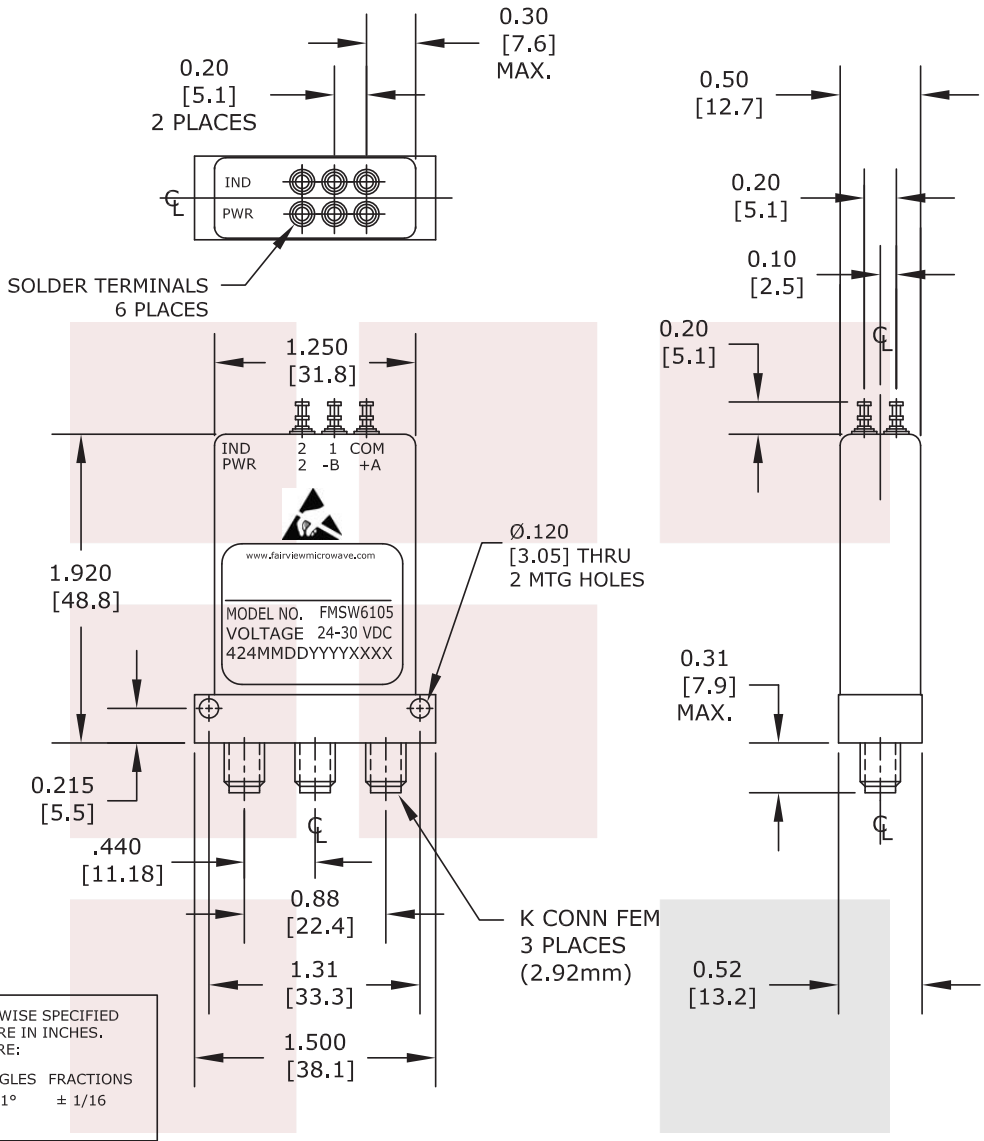

UNLESS OTHERWISE SPECIFIED DIMENSIONS ARE IN INCHES. TOLERANCES ARE:

DECIMALS	ANGLES	FRACTIONS
.XX ± .03	± 1°	± 1/16
.XXX ± .010		

HOLE DIAMETER	TOLERANCE
.0135 TO .125	+.004/-.001
.126 TO .250	+.005/-.001
.251 TO .500	+.006/-.001
.501 TO .750	+.008/-.001
.751 TO 1.000	+.010/-.001
1.001 TO 2.000	+.012/-.001

* THESE DIMENSIONS AND TOLERANCES SUPERSEDE NOTE #1 ON TITLE BLOCK.

FAIRVIEW MICROWAVE INC.
ALLEN, TX 75013 WWW.FAIRVIEWMICROWAVE.COM

NOTES:
1. UNLESS OTHERWISE SPECIFIED ALL DIMENSIONS ARE NOMINAL.
2. ALL SPECIFICATIONS ARE SUBJECT TO CHANGE WITHOUT NOTICE AT ANY TIME.
3. DIMENSIONS ARE IN INCHES [mm].

TITLE
SPDT Failsafe Electro-Mechanical Relay Switch From DC to 40 GHz, 10 Watts with Indicators, TTL, Diodes, 2.92mm

DWG NO FMSW6105
CAGE CODE 3FKR5

CAD FILE 021715 | SHEET | SCALE N/A | SIZE A | 200

Copyright © 2016

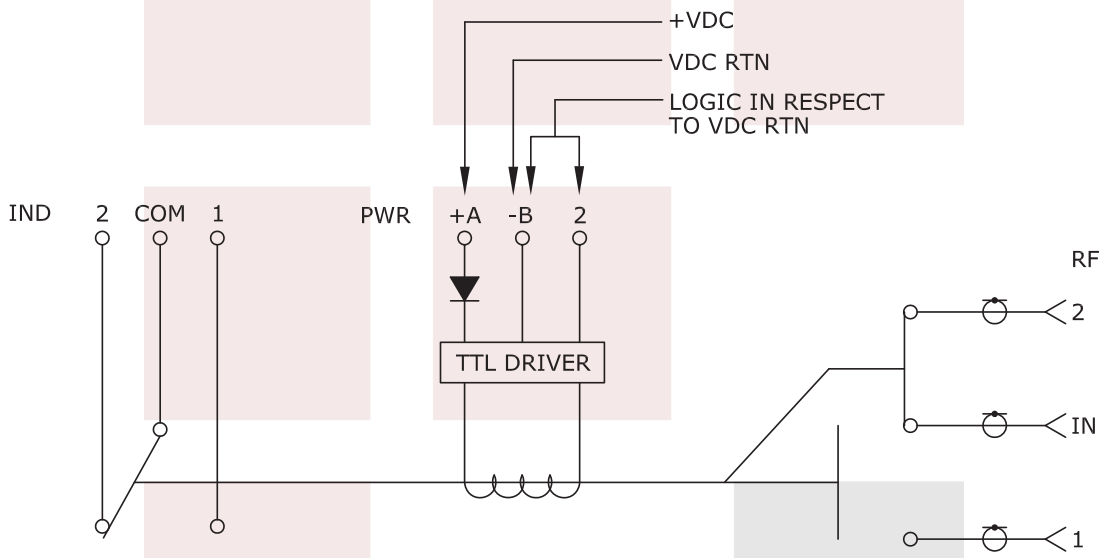

SCHEMATIC SHOWN IN DE-ENERGIZED POSITION

FAIRVIEW MICROWAVE INC. ALLEN, TX 75013 WWW.FAIRVIEWMICROWAVE.COM	NOTES: 1. UNLESS OTHERWISE SPECIFIED ALL DIMENSIONS ARE NOMINAL. 2. ALL SPECIFICATIONS ARE SUBJECT TO CHANGE WITHOUT NOTICE AT ANY TIME. 3. DIMENSIONS ARE IN INCHES [mm].				
TITLE SPDT Failsafe Electro-Mechanical Relay Switch From DC to 40 GHz, 10 Watts with Indicators, TTL, Diodes, 2.92mm	DWG NO FMSW6105		CAGE CODE 3FKR5		
	CAD FILE 021715	SHEET	SCALE N/A	SIZE A	200

1130 Junction Dr. #100 Allen, TX 75013 | Tel: 1-800-715-4396 / (972) 649-6678 / Fax: (972) 649-6689

Copyright © 2016