Fairview Microwave
RF COMPONENTS ON DEMAND. Done!

# SMH1112NR-10
# DATA SHEET

## WR-112 Standard Gain Horn With N Female Input and 10 dB Typical Gain Operating Within 7.05 GHz to 10 GHz Frequency Range

### Configuration

| | |
|---|---|
| Design | WR-112 Standard Gain Horn |
| Pattern | Directional |
| Polarization | Linear |
| Coaxial Interface | N Female |

### Electrical Specifications

| Description | Min | Typ | Max | Units |
|---|---|---|---|---|
| Frequency Range | 7.05 | | 10 | GHz |
| Impedance | | 50 | | Ohms |
| **Waveguide Standard Gain Horn** | | | | |
| Gain | | 10 | | dB |
| Horizontal 3dB Beam Width | | 55.2 | | Degrees |
| Vertical 3dB Beam Width | | 56.8 | | Degrees |
| **Waveguide to Coaxial Adapter** | | | | |
| Input VSWR | | | 1.25:1 | |

### Mechanical Specifications

**Size**

| | |
|---|---|
| Length | 4.12 in 104.65 mm |
| Width/Diameter | 1.63 in 41.4 mm |
| Height | 1.18 in 29.97 mm |

**RF Connector**

| | |
|---|---|
| Type | N Female |
| Body Material and Plating | Passivated Stainless Steel |

**Waveguide Interface**

| | |
|---|---|
| Waveguide Size | WR-112 |
| Body Material and Plating | Aluminum |

### Environmental Specifications

### Compliance Certifications (see product page for current document)

### Plotted and Other Data

Notes:

Fairview Microwave
1130 Junction Dr. #100
Allen, TX 75013
Tel: 1-800-715-4396 / (972) 649-6678
Fax: (972) 649-6689
www.fairviewmicrowave.com
sales@fairviewmicrowave.com


Copyright © 2016

WR-112 Standard Gain Horn With N Female Input and 10 dB Typical Gain Operating Within 7.05 GHz to 10 GHz Frequency Range from Fairview Microwave is in-stock and available to ship same-day. All of our RF/microwave products are available off-the-shelf from our ISO 9001:2008 certified facilities in Allen, Texas. Fairview Microwave is RF on-demand.

For additional information on this product, please click the following link: WR-112 Standard Gain Horn With N Female Input and 10 dB Typical Gain Operating Within 7.05 GHz to 10 GHz Frequency Range SMH1112NR-10

URL: https://www.fairviewmicrowave.com/wr-112-standard-gain-horn-10-db-n-smh1112nr-10-p.aspx

The information contained in this document is accurate to the best of our knowledge and representative of the part described herein. It may be necessary to make modifications to the part and/or the documentation of the part, in order to implement improvements. Fairview Microwave reserves the right to make such changes as required. Unless otherwise stated, all specifications are nominal. Fairview Microwave does not make any representation or warranty regarding the suitability of the part described herein for any particular purpose, and Fairview Microwave does not assume any liability arising out of the use of any part or documentation.

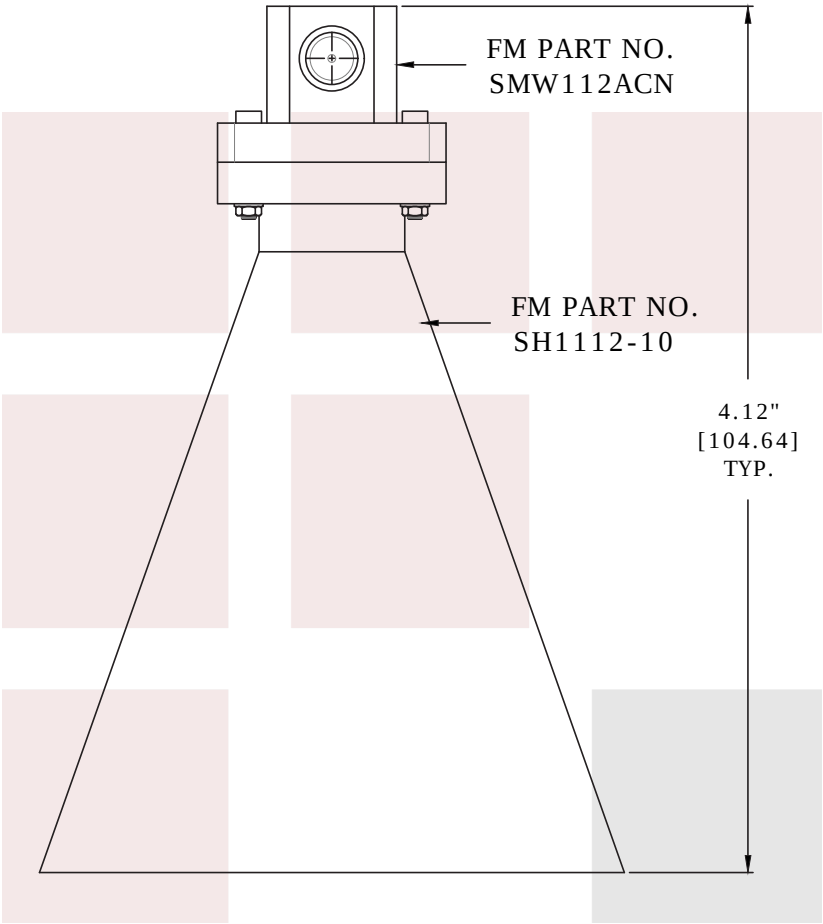


| | |
|---|---|
| FAIRVIEW MICROWAVE INC.<br>ALLEN, TX 75013 WWW.FAIRVIEWMICROWAVE.COM | NOTES:<br>1. UNLESS OTHERWISE SPECIFIED ALL DIMENSIONS ARE NOMINAL.<br>2. ALL SPECIFICATIONS ARE SUBJECT TO CHANGE WITHOUT NOTICE AT ANY TIME.<br>3. DIMENSIONS ARE IN INCHES [mm]. |
| TITLE<br>WR-112 Standard Gain Horn With N Female Input and 10 dB Typical Gain Operating Within 7.05 GHz to 10 GHz Frequency Range | DWG NO SMH1112NR-10 / CAGE CODE 3FKR5<br>CAD FILE 082416 / SHEET / SCALE N/A / SIZE A / 5568 |

1130 Junction Dr. #100 Allen, TX 75013 | Tel: 1-800-715-4396 / (972) 649-6678 / Fax: (972) 649-6689

Copyright © 2016

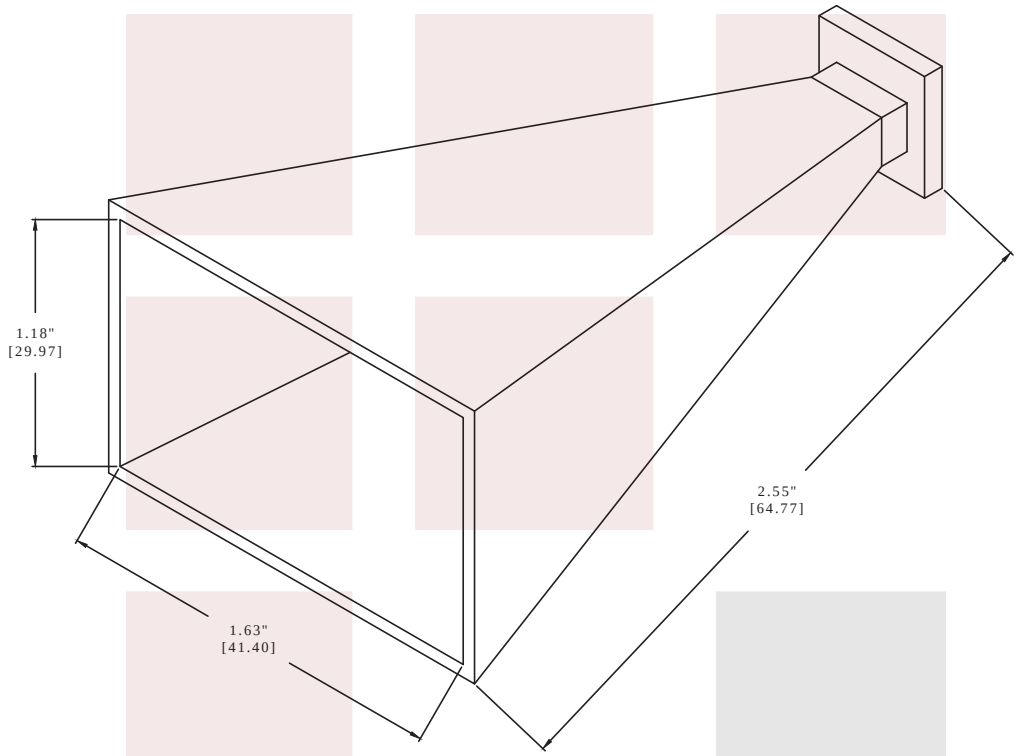


| | | | | | |
|---|---|---|---|---|---|
| FAIRVIEW MICROWAVE INC.<br>ALLEN, TX 75013 WWW.FAIRVIEWMICROWAVE.COM | NOTES:<br>1. UNLESS OTHERWISE SPECIFIED ALL DIMENSIONS ARE NOMINAL.<br>2. ALL SPECIFICATIONS ARE SUBJECT TO CHANGE WITHOUT NOTICE AT ANY TIME.<br>3. DIMENSIONS ARE IN INCHES [mm]. | | | | |
| TITLE<br>WR-112 Standard Gain Horn With N Female Input and 10 dB Typical Gain Operating Within 7.05 GHz to 10 GHz Frequency Range | DWG NO<br>SMH1112NR-10 | | CAGE CODE<br>3FKR5 | | |
| | CAD FILE 082416 | SHEET | SCALE N/A | SIZE A | 5568 |

1130 Junction Dr. #100 Allen, TX 75013 | Tel: 1-800-715-4396 / (972) 649-6678 / Fax: (972) 649-6689

Copyright © 2016