Fairview Microwave
an INFINITE brand

FMHR0210-200CM DATA SHEET

Temperature Conditioned Low Loss TNC Female Bulkhead to TNC Female Bulkhead Cable LL160 Coax in 200 cm

Temperature conditioned low loss TNC Female Bulkhead to TNC Female Bulkhead cable assemblies with RF test reports from Fairview Microwave are part of our full line of reliable RF components available to ship same day. These COTS (commercial-off-the-shelf) cable assemblies using LL160 triple shielded coax with expanded PTFE dielectric have traceable processes and materials that are recorded and provided in the included test report. The temperature pre-conditioned coaxial cable and captivated stainless steel RF connectors are assembled with J-STD-001 soldering processes and meet WHMA-A-620 workmanship criteria. The carefully selected materials, temperature conditioning, assembly processes and test sequence ensure a dependable cable assembly for high-reliability applications with wide temperature excursions and where the cost of failure is high. Each serialized TNC to TNC low loss cable assembly is traceable to its component lots and test data ships with every cable.

This low loss temperature tolerant hi-rel cable assembly using LL160 expanded PTFE cable datasheet PDF contains specifications, CAD drawing and dimensions that are shown below. Fairview Microwave offers these high-reliability RF cable assemblies with test data and many other RF, microwave and millimeter wave components which allow designers to configure and customize their signal systems however they like. Whether the need is to provide reliable interconnects over wide temperature extremes or have supporting test reports, Fairview Microwave has the right cable assemblies for the job. Fairview can also expertly build your custom RF cable assemblies for you and ship same day.

Referenced Specifications

IPC/WHMA-A-620	Requirements and Acceptance for Cable and Wire Harness Assemblies
MIL-STD-348	Radio Frequency Connector Interfaces for MIL-DTL-3643, MIL-DTL-3650, MIL-DTL-3655, MIL-DTL-25516, MIL-PRF-31031, MIL-PRF-39012, MIL-PRF-49142, MIL-PRF...
IPC J-STD-001	Requirements for Soldered Electrical and Electronic Assemblies
IPC J-STD-006	Requirements for Electronic Grade Solder Alloys and Fluxed and Non-Fluxed Solid Solders for Electronic Soldering Applications
SAE AS5942	Marking of Electrical Insulating Materials
SAE AS23053	Insulation Sleeving, Electrical, Heat Shrinkable, General Specifications For

Material Specifications

Component	Specification
Cable	LL160 per LL160 datasheet
Connector 1	FMCN1469 per MIL-STD-348
Connector 2	FMCN1469 per MIL-STD-348
Heat Shrink 1	SUMITUBE W3B2(4X) 12/3 per SAE AS23053 as applicable
Heat Shrink 2	SUMITUBE W3B2(4X) 12/3 per SAE AS23053 as applicable
Heat Shrink 3	M23053/4-303-0 per SAE AS23053
Heat Shrink 4	M23053/4-303-0 per SAE AS23053
Solder	SN63 per J-STD-006



Configuration:

- Connector 1: FMCN1469 (TNC Female Bulkhead)
- Connector 2: FMCN1469 (TNC Female Bulkhead)
- Cable: LL160

Features:

- Max Frequency 18 GHz
- 82.5% Phase Velocity
- Triple Shielded
- FEP Jacket
- Temperature Pre-Conditioned Cable
- J-STD Soldering
- Lot Traceability
- Captivated Stainless Steel Connectors
- Expanded PTFE dielectric
- Serialized Test Data & Report
- In-stock and ships same day

Applications:

- General Purpose
- Laboratory Use
- Extreme Temperatures
- Hi-Reliability
- Unmanned Systems
- COTS Solutions
- Avionics
- Electronic Countermeasures(ECM)

Cable Diagram:

Fairview Microwave
301 Leora Ln., Suite 100
Lewisville, TX 75056
Tel: 1-800-715-4396 / (972) 649-6678
Fax: (972) 649-6689
www.fairviewmicrowave.com
sales@fairviewmicrowave.com

Copyright © 2019

Electrical Specifications

Description	Min	Typ	Max	Units
Frequency Range	DC		18	GHz
VSWR			1.4:1	
Velocity of Propagation		82.5		%
Capacitance		25 [82.02]		pF/ft [pF/m]
Dielectric Withstanding Voltage (AC)			1,000	Vrms

Specifications by Frequency

Description	F1	F2	F3	F4	F5	Units
Frequency	1	2	4.5	9	18	GHz
Insertion Loss (Max.)	0.81	1.16	1.74	2.5	3.67	dB

Electrical Specification Notes:
The Insertion Loss data above is based on the performance specifications of the coax cable used in this assembly. The Insertion Loss includes an estimated insertion loss of 0.04*SQRT(FGHz) dB per connector.

Mechanical Specifications

Cable Assembly

Description	Min	Typ	Max	Units
Length*	78.7402 [200]	78.7402 [200]	80.7402 [205.08]	in [cm]
Cable Outer Diameter	0.155	0.16	0.165	in
Weight			0.31 [140.61]	lbs [g]

Cable Characteristics

Component	Specification
Cable Type	LL160
Impedance	50 Ohms
Inner Conductor Type	Solid
Inner Conductor Mat. & Plat.	Copper, Silver
Dielectric Type	Expanded PTFE Tape
Number of Shields	3
Shield Layer 1	Silver Plated Copper
Shield Layer 2	Aluminum Polyester
Shield Layer 3	Silver Plated Copper Wire
Jacket Material	FEP

Copyright © 2019

Connector Characteristics

Description	Connector 1	Connector 2
Type	TNC Female Bulkhead	TNC Female Bulkhead
Specification	MIL-STD-348	MIL-STD-348
Impedance	50 Ohms	50 Ohms
Contact Mat. & Plat.	Beryllium Copper, Gold over Nickel	Beryllium Copper, Gold over Nickel
Contact Plating Spec.	50 µin minimum	50 µin minimum
Dielectric Type	PTFE	PTFE
Outer Conductor Mat. & Plat.	Passivated Stainless Steel	Passivated Stainless Steel
Outer Conductor Plating Spec.	SAE-AMS-2700	SAE-AMS-2700
Body Mat. & Plat.	Passivated Stainless Steel	Passivated Stainless Steel
Body Plating Spec.	SAE-AMS-2700	SAE-AMS-2700
Contact Gage Spec.	0.187 in min	0.187 in min
Insulator Gage Spec.	0.188 to 0.208 in	0.188 to 0.208 in

Environmental Specifications

Description	Specification
Temperature Operating Range	-55 to +125 deg C

Compliance Certifications (see product page for current document)

Process Specifications

Process	Specification
Cable Preconditioning	5 cycles, -55 °C to +125°C, 20 minute dwells
Soldering	in accordance with J-STD-001, class 3
Marking	shall meet the adherence requirements of SAE AS5942
Workmanship	shall be in accordance with IPC/WHMA-A-620, class 3

Tests and Inspections

Test	Sampling
Connector Gaging (pin and insulator position)	100%
Insertion Loss	100%
VSWR	100%
Dielectric Withstanding Voltage (DWV)	100%
Visual - workmanship, configuration and marking	100%
Length	C=0, 1.5 AQL
Mass	C=0, 1.5 AQL

Plotted and Other Data

Notes:

- Values at 25°C, sea level.

Copyright © 2019

Typical Performance Data

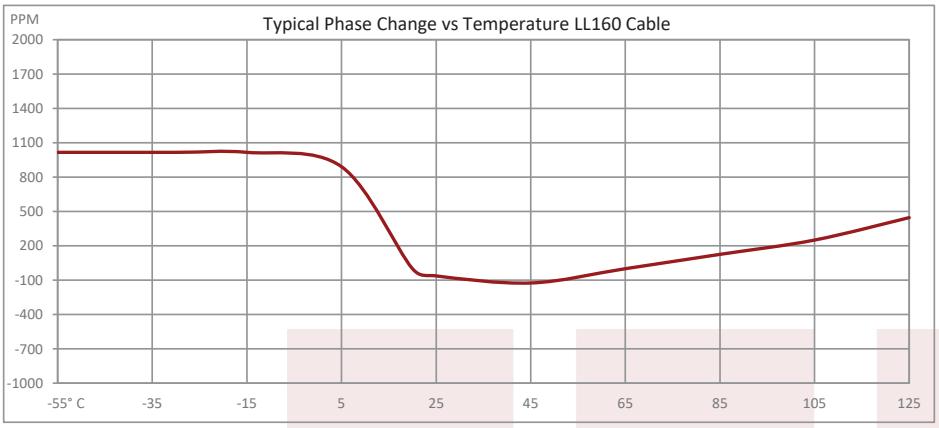

How to Order

Part Number Configuration: **FMHR0210 - xx uu**

- uu: cm = Centimeters; <blank> = Inches
- xx: Length

Example: FMHR0210-12 = 12 inches long cable
FMHR0210-100cm = 100 cm long cable

301 Leora Ln., Suite 100, Lewisville, TX 75056 | Tel: 1-800-715-4396 / (972) 649-6678 / Fax: (972) 649-6689

Copyright © 2019

Cable Assembly Length Tolerances:

Imperial English		Metric	
"L" ≤ 1 ft	+0.5 in / -0 in	"L" ≤ 0.3 m	+12.5 mm / -0 mm
1 ft < "L" ≤ 5 ft	+1 in / -0 in	0.3 m < "L" ≤ 1.5 m	+25 mm / -0 mm
5 ft < "L" ≤ 10 ft	+2 in / -0 in	1.5 m < "L" ≤ 3 m	+50 mm / -0 mm
10 ft < "L" ≤ 25 ft	+3 in / -0 in	3 m < "L" ≤ 7.5 m	+75 mm / -0 mm
25 ft < "L"	+2%"L" / -0%"L"	7.5 m < "L"	+2%"L" / -0%"L"

* Cable Length = "L"

Temperature Conditioned Low Loss TNC Female Bulkhead to TNC Female Bulkhead Cable LL160 Coax in 200 cm from Fairview Microwave has same day shipment for domestic and International orders. Our RF, microwave and fiber optic products maintain a 99% availability and are part of the broadest selection in the industry.

Click the following link to obtain additional part information: Temperature Conditioned Low Loss TNC Female Bulkhead to TNC Female Bulkhead Cable LL160 Coax in 200 cm FMHR0210-200CM

URL: https://www.fairviewmicrowave.com/temperature-conditioned-tnc-female-tnc-female-cable-ll160-coax-fmhr0210-200cm-p.aspx

The information contained in this document is accurate to the best of our knowledge and representative of the part described herein. It may be necessary to make modifications to the part and/or the documentation of the part, in order to implement improvements. Fairview Microwave reserves the right to make such changes as required. Unless otherwise stated, all specifications are nominal. Fairview Microwave does not make any representation or warranty regarding the suitability of the part described herein for any particular purpose, and Fairview Microwave does not assume any liability arising out of the use of any part or documentation.

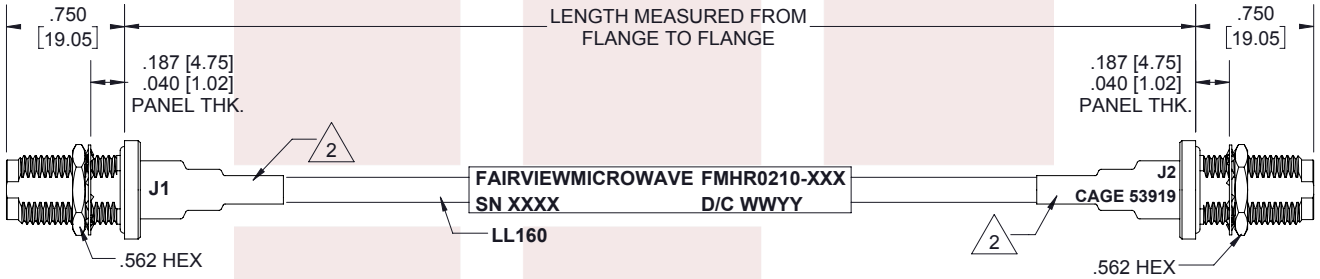

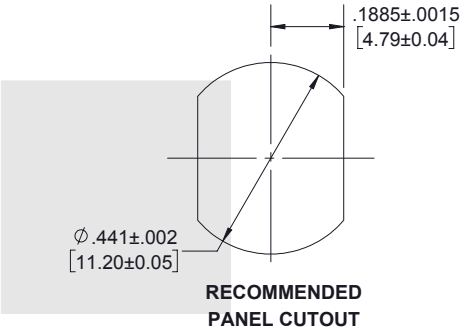

STANDARD TOLERANCES	
.X	±0.2
.XX	±0.01
.XXX	±0.005

*STANDARD TOLERANCES APPLY ONLY TO DIMENSIONS IN INCHES

NOTES:
1. ALL BLACK HEAT SHRINK WITH WHITE MARKINGS.
2. TOP LAYER: SUMITUBE W3B2 (4X) - SIZE 12/3
   BOTTOM LAYER: M23053/4-303-0.

Fairview Microwave RF COMPONENTS ON DEMAND. Done!

NOTES:
1. UNLESS OTHERWISE SPECIFIED ALL DIMENSIONS ARE NOMINAL.
2. ALL SPECIFICATIONS ARE SUBJECT TO CHANGE WITHOUT NOTICE AT ANY TIME.
3. DIMENSIONS ARE IN INCHES [mm].

TITLE	DWG NO	CAGE CODE			
Temperature Conditioned Low Loss TNC Female Bulkhead to TNC Female Bulkhead Cable LL160 Coax in 200 cm	FMHR0210	3FKR5			
	CAD FILE 02/19/19	SHEET 1 OF 1	SCALE N/A	SIZE A	CN2379

301 Leora Ln., Suite 100, Lewisville, TX 75056 | Tel: 1-800-715-4396 / (972) 649-6678 / Fax: (972) 649-6689

Copyright © 2019