1.85mm Male to 1.85mm Male Cable FM-P047HF Coax

FMCA9987

Configuration

- Connector 1: 1.85mm Male
- Connector 2: 1.85mm Male
- Cable Type: FM-P047HF
- Coax Flex Type: Flexible

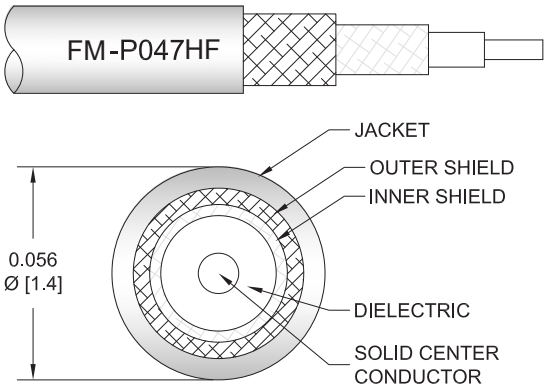

Features

- Max Frequency 70 GHz
- Shielding Effectivity > 90 dB
- 70% Phase Velocity
- Double Shielded
- FEP Jacket
- 500 Mating Cycles

Applications

- General Purpose
- Laboratory Use

Description

The 1.85mm male to 1.85mm male cable using FM-P047HF coax, part number FMCA9987, from Fairview Microwave is in-stock and ships same day. This Fairview 1.85mm to 1.85mm cable assembly has a male to male gender configuration with 50 ohm flexible FM-P047HF coax. Fairview Microwave's flexible RF cable assemblies are ideal for applications where tight bends and continual flexure are required. The FMCA9987 1.85mm male to 1.85mm male cable assembly operates to 70 GHz. The double shielding of this Fairview cable assembly provides excellent shielding effectiveness of better than 90 dB.

Custom versions of most RF cable assemblies can be built and shipped same day. Custom cable assembly lengths can be obtained by specifying the desired length on the web site at time of order or by contacting a sales representative. Other RF cable assembly value added services including connector orientation or clocking, heat shrink booting and labeling are also available. RF testing can also be performed to document the electrical performance of your cable assembly.

Electrical Specifications

Description	Minimum	Typical	Maximum	Units
Frequency Range	DC		70	GHz
VSWR			1.4:1	
Velocity of Propagation		70		%
RF Shielding	90			dB
Capacitance		29 [95.14]		pF/ft [pF/m]

Specifications by Frequency

© 2023 Infinite Electronics, Inc. Fairview Microwave is a registered trademark of Infinite Electronics, Inc.
+1 (866) 839-4711 | sales@fairviewmicrowave.com | fairviewmicrowave.com

1.85mm Male to 1.85mm Male Cable FM-P047HF Coax

FMCA9987

Part Number	Length	Description	F1	F2	F3	F4	F5	Units	Weight (lbs)
		Frequency	5000	10000	20000	40000	65000	MHz	
FMCA9987	Custom Lengths Available	Insertion Loss (Typ.)	0.81	1.177	1.782	2.774	3.77	dB/ft	
			2.66	3.87	5.85	9.11	12.37	dB/m	
FMCA9987-6	6 inch	Insertion Loss (Typ.)	0.59	0.85	1.25	1.9	2.53	dB	0.018
FMCA9987-12	12 inch	Insertion Loss (Typ.)	1.43	2.15	2.88	3.28	4.42	dB	0.02
FMCA9987-24	24 inch	Insertion Loss (Typ.)	2.61	3.93	5.3	6.06	8.19	dB	0.025
FMCA9987-36	36 inch	Insertion Loss (Typ.)	3.79	5.71	7.71	8.83	11.96	dB	0.029
FMCA9987-48	48 inch	Insertion Loss (Typ.)	4.97	7.49	10.13	11.61	15.73	dB	0.033

The insertion loss data for the base model does not include loss due to the connectors. Each length includes insertion loss due to the connectors.

Loss due to Connector 1:	0.04 x sqrt(fGHz)	dB
Loss due to Connector 2:	0.04 x sqrt(fGHz)	dB
Base Weight:	0.02	pounds
Additional Weight per Inch:	0.00034	pounds

Mechanical Specifications

Cable Assembly

Weight	0.02 lbs [9.07 g]

Cable

Cable Type	FM-P047HF
Impedance	50 Ohms
Inner Conductor Type	Solid
Inner Conductor Material and Plating	Copper, Silver
Dielectric Type	PTFE
Number of Shields	2
Shield Layer 1	Silver Plated Copper Tape
Shield Layer 2	Silver Plated Copper Braid
Jacket Material	FEP, Blue
Jacket Diameter	0.06 in [1.52 mm]
Repeated Minimum Bend Radius	0.1 in [2.54 mm]

© 2023 Infinite Electronics, Inc. Fairview Microwave is a registered trademark of Infinite Electronics, Inc.
+1 (866) 839-4711 | sales@fairviewmicrowave.com | fairviewmicrowave.com

1.85mm Male to 1.85mm Male Cable FM-P047HF Coax

FMCA9987

Connectors

Description	Connector 1	Connector 2
Type	1.85mm Male	1.85mm Male
Impedance	50 Ohms	50 Ohms
Configuration	Straight	Straight
Mating Cycles	500	500
Contact Material and Plating	Beryllium Copper, Gold over Nickel	Beryllium Copper, Gold over Nickel
Contact Plating Specification	50 µin minimum	50 µin minimum
Dielectric Type	PEI	PEI
Body Material and Plating	Beryllium Copper, Gold over Nickel	Beryllium Copper, Gold over Nickel
Body Plating Specification	50 µin minimum	50 µin minimum
Coupling Nut Material and Plating	Passivated Stainless Steel	Passivated Stainless Steel
Coupling Nut Plating Specification	ASTM-A582	ASTM-A582
Hex Size	5/16 inch	5/16 inch
Torque	8 in-lbs 0.9 Nm	8 in-lbs 0.9 Nm
Seal Gasket Material	Silicone Rubber	Silicone Rubber

Environmental Specifications

Operating Range Temperature	-65 to +150 deg C
Shock	MIL-STD-202, Method 213, Condition I
Vibration	MIL-STD-202, Method 204, Condition D
Thermal Shock	MIL-STD-202, Method 107, Condition B
Salt Fog	MIL-STD-202, Method 101, Condition B, 5% salt solution

Compliance Certifications (see product page for current document)

Plotted and Other Data

Notes:

© 2023 Infinite Electronics, Inc. Fairview Microwave is a registered trademark of Infinite Electronics, Inc.
+1 (866) 839-4711 | sales@fairviewmicrowave.com | fairviewmicrowave.com

1.85mm Male to 1.85mm Male Cable FM-P047HF Coax

FMCA9987

Typical Performance Data

How to Order

Part Number Configuration: **FMCA9987 - xx uu**

- **uu** — Unit of Measure:
  - cm = Centimeters
  - <blank> = Inches
- **xx** — Length
- **FMCA9987** — Base Number

Example: FMCA9987-12 = 12 inches long cable
FMCA9987-100cm = 100 cm long cable

1.85mm Male to 1.85mm Male Cable FM-P047HF Coax from Fairview Microwave is in-stock and available to ship same-day. All of our RF/microwave products are available off-the-shelf from our ISO 9001:2008 certified facilities in Lewisville, Texas. Fairview Microwave is RF on-demand.

For additional information on this product, please click the following link: 1.85mm Male to 1.85mm Male Cable FM-P047HF Coax FMCA9987

URL: https://www.fairviewmicrowave.com/1.85mm-male-to-1.85mm-male-cable-fm-p047hf-coax-fmca9987-p.aspx

The information contained within this document is accurate to the best of our knowledge and representative of the part described herein. It may be necessary to make modifications to the part and/or the documentation of the part in order to impliment improvements. Fairview Microwave reserves the right to make such changes as required. Unless otherwise stated, all specifications are nominal. Fairview Microwave does not make any representation or warranty regarding the suitability of the part described herein for any particular purpose, and Fairview Microwave does not assume liability arising out of the use of any part or document.

© 2023 Infinite Electronics, Inc. Fairview Microwave is a registered trademark of Infinite Electronics, Inc.

FMCA9987 CAD Drawing

1.85mm Male to 1.85mm Male Cable FM-P047HF Coax

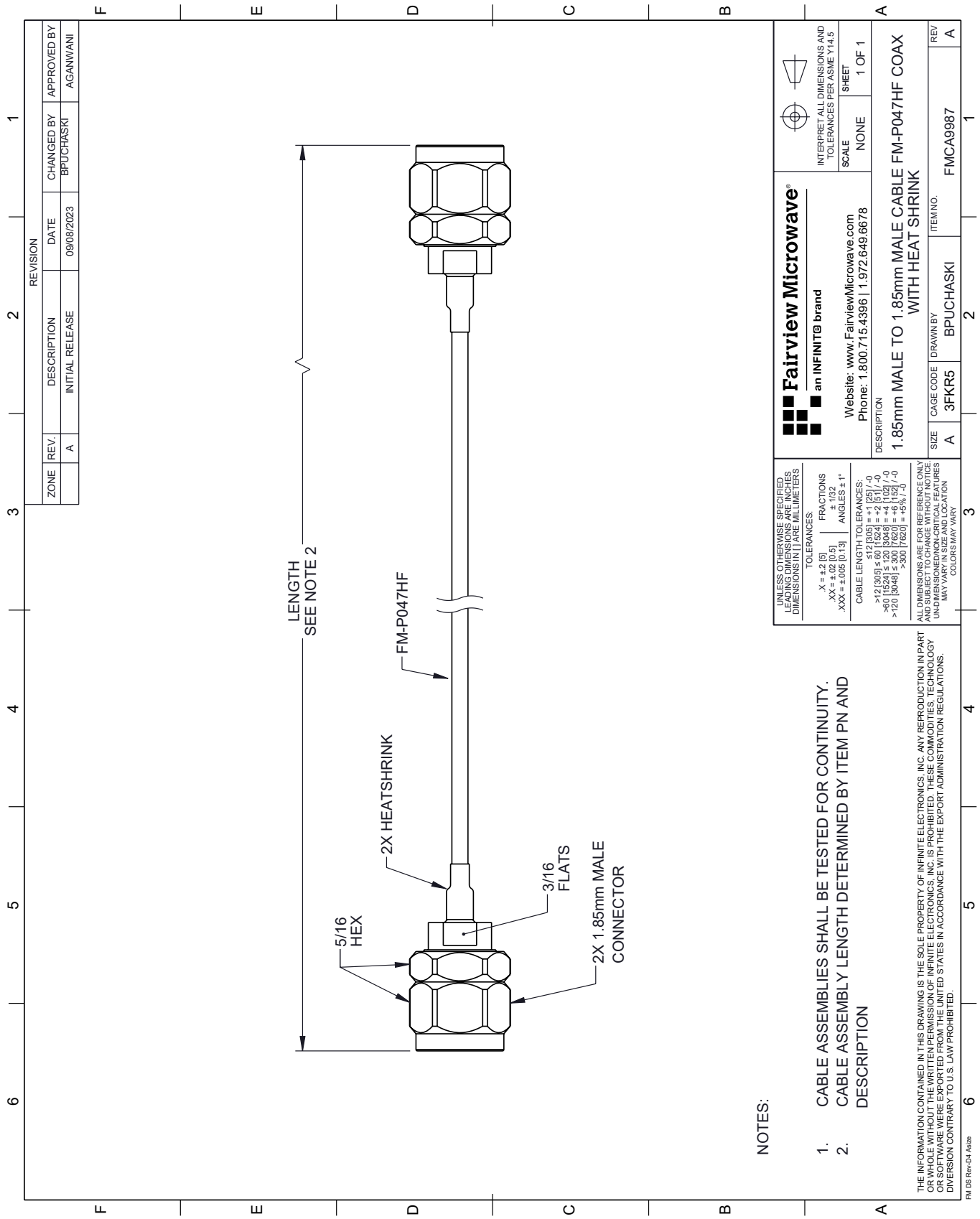

© 2023 Infinite Electronics, Inc. Fairview Microwave is a registered trademark of Infinite Electronics, Inc.