Fairview Microwave
an INFINITE brand

FMCA2144-18
DATA SHEET

RA SMA Male to TNC Female Bulkhead Cable FM-SR141TBJ Coax in 18 Inch with LF Solder



The RA SMA male to TNC female bulkhead 18 inch cable using FM-SR141TBJ coax, part number FMCA2144-18, from Fairview Microwave is in-stock and ships same day. This Fairview SMA to TNC cable assembly has a male to female gender configuration with 50 ohm formable FM-SR141TBJ coax. Fairview Microwave's formable RF cable assemblies provide an alternative to costly pre-formed semi-rigid assemblies since they are hand formable. The FMCA2144-18 SMA male to TNC female cable assembly operates to 6 GHz. The right angle SMA interface on the FM-SR141TBJ cable allows for easier connections in tight spaces. Our RF cable assembly with TNC bulkhead interface allows designers to create external connections on their product enclosures, and can be used in a variety of other rack mount and panel mount applications.

Custom versions of most RF cable assemblies can be built and shipped same day. Custom cable assembly lengths can be obtained by specifying the desired length on the web site at time of order or by contacting a sales representative. Other RF cable assembly value added services including connector orientation or clocking, heat shrink booting and labeling are also available. RF testing can also be performed to document the electrical performance of your cable assembly.

Electrical Specifications

Description	Min	Typ	Max	Units
Frequency Range	DC		6	GHz
VSWR			1.4:1	
Velocity of Propagation		70		%
RF Shielding	100			dB
Group Delay		1.43 [4.69]		ns/ft [ns/m]
Capacitance		29 [95.14]		pF/ft [pF/m]

Performance by Frequency

Description	F1	F2	F3	F4	F5	Units
Frequency	0.25	0.5	1	2.5	6	GHz
Insertion Loss (Typ.)	0.384	0.423	0.487	0.597	0.828	dB

Electrical Specification Notes:
The Insertion Loss includes an estimated insertion loss of 0.1 dB for the straight connector and 0.2 dB for the right angle connector.

Mechanical Specifications

Cable Assembly

Length*	18 in [457.2 mm]
Diameter	0.69 in [17.53 mm]

Cable

Cable Type	FM-SR141TBJ
Impedance	50 Ohms
Inner Conductor Type	Solid
Inner Conductor Material and Plating	Copper Clad Steel, Silver
Dielectric Type	PTFE

Configuration:

- SMA Male Right Angle
- TNC Female Bulkhead
- FM-SR141TBJ

Features:

- Max Frequency 6 GHz
- Shielding Effectivity > 100 dB
- 70% Phase Velocity
- FEP Jacket
- Dimensionally and electrically the same as standard, solid outer conductor semi-rigid coax
- Cable may be formed by hand and does not require special tools to bend
- May be formed more than once without damaging the outer conductor
- High RF Shielding >100 dB
- 100% Hi-pot and continuity tested
- 100% VSWR tested to max frequency of assembly
- Standard and custom lengths ship the same day

Applications:

- General Purpose
- Laboratory Use

Fairview Microwave
301 Leora Ln., Suite 100
Lewisville, TX 75056
Tel: 1-800-715-4396 / (972) 649-6678
Fax: (972) 649-6689
www.fairviewmicrowave.com
sales@fairviewmicrowave.com

Copyright © 2019

Outer Conductor Material and Plating	Tinned Copper Composite Braid
Jacket Material	FEP, Black
Jacket Diameter	0.161 in [4.09 mm]
One Time Minimum Bend Radius	0.315 in [8 mm]
Repeated Minimum Bend Radius	1.575 in [40.01 mm]

Connectors

Description	Connector 1	Connector 2
Type	SMA Male	TNC Female
Mount Method		Bulkhead
Impedance	50 Ohms	50 Ohms
Contact Material & Plating	Brass, Gold	Beryllium Copper, Gold
Dielectric Type	PTFE	PTFE
Body Material & Plating	Brass, Gold	Brass, Nickel
Coupling Nut Material & Plating	Passivated Stainless Steel	
Hex Size	5/16 in.	
Torque	8 in-lbs 0.9 Nm	

Mechanical Specification Notes:

*All cable assemblies have a length tolerance of 1.5% or ± 3/8", whichever is greater.

Compliance Certifications (see product page for current document)

Plotted and Other Data

Notes:

- Values at 25°C, sea level.

How to Order

Part Number Configuration: **FMCA2144 - xx uu**

- uu: cm = Centimeters; <blank> = Inches
- xx: Length

Example: FMCA2144-12 = 12 inches long cable
FMCA2144-100cm = 100 cm long cable

Copyright © 2019

RA SMA Male to TNC Female Bulkhead Cable FM-SR141TBJ Coax in 18 Inch with LF Solder from Fairview Microwave has same day shipment for domestic and International orders. Our RF, microwave and fiber optic products maintain a 99% availability and are part of the broadest selection in the industry.

Click the following link to obtain additional part information: RA SMA Male to TNC Female Bulkhead Cable FM-SR141TBJ Coax in 18 Inch with LF Solder FMCA2144-18

URL: https://www.fairviewmicrowave.com/ra-sma-male-tnc-female-cable-fm-sr141tbj-coax-fmca2144-18-p.aspx

The information contained in this document is accurate to the best of our knowledge and representative of the part described herein. It may be necessary to make modifications to the part and/or the documentation of the part, in order to implement improvements. Fairview Microwave reserves the right to make such changes as required. Unless otherwise stated, all specifications are nominal. Fairview Microwave does not make any representation or warranty regarding the suitability of the part described herein for any particular purpose, and Fairview Microwave does not assume any liability arising out of the use of any part or documentation.

REVISIONS			
REV.	DESCRIPTION	DATE	APPROVED
A	INITIAL RELEASE	12/03/19	S.ELLIS

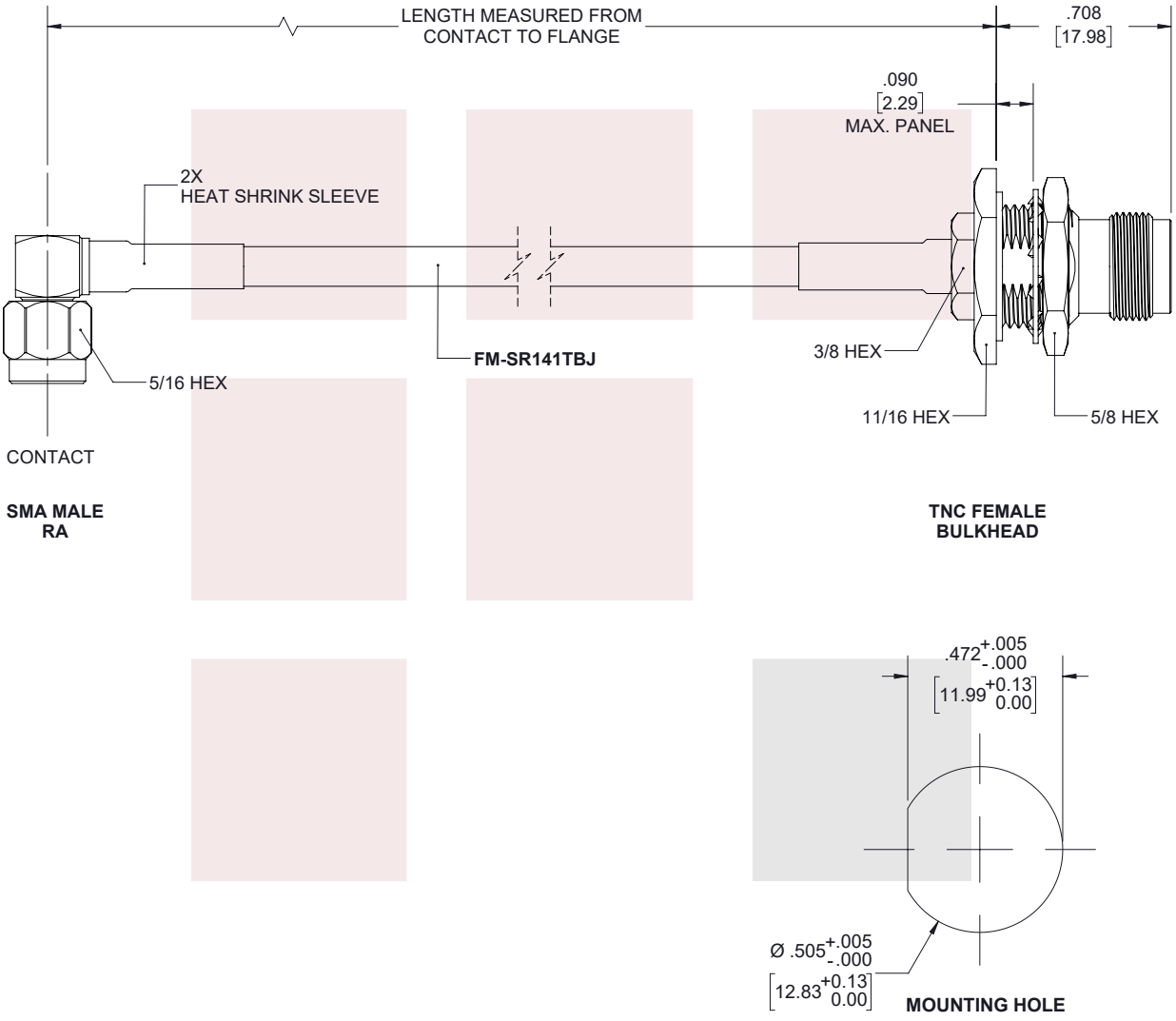

THESE COMMODITIES, TECHNOLOGY OR SOFTWARE WERE EXPORTED FROM THE UNITED STATES IN ACCORDANCE WITH THE EXPORT ADMINISTRATION REGULATIONS. DIVERSION CONTRARY TO U.S. LAW PROHIBITED.

Fairview Microwave™
an INFINITE brand

TITLE

RA SMA Male to TNC Female Bulkhead Cable FM-SR141TBJ Coax in 18 Inch with LF Solder

UNLESS OTHERWISE SPECIFIED LEADING DIMENSIONS ARE INCHES
DIMENSIONS IN [ ] ARE MILLIMETERS

TOLERANCES:

.X = ±.2 [5.08]
.XX = ±.02 [.51]
.XXX = ±.005 [.13]
FRACTIONS ± 1/32
ANGLES ± 1°

CABLE LENGTH (L) TOLERANCES:

L ≤ 12 [305] = +1 [25] / -0
12 [305] < L ≤ 60 [1524] = +2 [51] / -0
60 [1524] < L ≤ 120 [3048] = +4 [102] / -0
120 [3048] < L ≤ 300 [7620] = +6 [152] / -0
300 [7620] < L = +5%L / -0

THIRD-ANGLE PROJECTION

THE INFORMATION AND DESIGN IN THIS DOCUMENT IS THE PROPERTY OF FAIRVIEW MICROWAVE CORPORATION. ALL RIGHTS RESERVED.

SHEET 1 OF 1

ALL DIMENSIONS SHOWN ARE FOR REFERENCE ONLY.

SCALE N/A

SIZE	CAGE CODE	DRAWN BY	PART NUMBER	REV
A	3FKR5	K.DANG	FMCA2144	A

T-Rev.D

Copyright © 2019