Fairview Microwave
RF COMPONENTS ON DEMAND. Done!

FMCN1465
DATA SHEET

SMA Male Connector Clamp/Solder Attachment For LL160 Cable



SMA male connector with clamp/solder attachment for LL160, part number FMCN1465, from Fairview Microwave is in-stock and ships same day. This SMA male connector operates up to a maximum frequency of 18 GHz and offers excellent VSWR of 1.16:1.

Fairview's SMA male connector FMCN1465 datasheet specifications and outline drawing are shown in this PDF below. Our extensive offering of RF, microwave and millimeter wave connectors allows designers to configure and customize their signal connections however they like. From providing an I/O for a board design to creating a custom cable assembly configuration, Fairview Microwave has a connector solution to meet your needs. Fairview Microwave also has the expertise to build your custom cable assemblies for you and ship them same-day.

Configuration:

- SMA Male Connector
- 50 Ohms
- Straight Body Geometry
- LL160 Interface Type
- Clamp/Solder Attachment

Features:

- Operating Frequency of 18 GHz Max.
- Excellent VSWR of 1.16:1
- Gold Plated Beryllium Copper Contact
- Contact plating according to ASTM-B488

Applications:

- General Purpose Test
- Custom Cable Assemblies

Electrical Specifications

Description	Min	Typ	Max	Units
Frequency Range	DC		18	GHz
VSWR			1.16:1	
DWV (AC)			1,000	Vrms

Electrical Specification Notes:
Insertion Loss is 0.04*SQRT(Freq GHz)

Mechanical Specifications

Weight 0.36 lbs [163.29 g]

Material Specifications

Description	Material	Plating
Contact	Beryllium Copper	Gold ASTM-B488
Insulation	PTFE	
Body	Passivated Stainless Steel	
Coupling Nut	Passivated Stainless Steel	
Gasket	Silicone Rubber	
Crimp Sleeve	Brass	Gold ASTM-B488
O-Ring	Silicone Rubber	

Environmental Specifications

Temperature
Operating Range -65 to +165 deg C

Compliance Certifications (see product page for current document)

Plotted and Other Data

Notes:

Fairview Microwave
301 Leora Ln., Suite 100
Lewisville, TX 75056
Tel: 1-800-715-4396 / (972) 649-6678
Fax: (972) 649-6689
www.fairviewmicrowave.com
sales@fairviewmicrowave.com

Copyright © 2018

Assembly Instruction

1. TRIM CABLE TO EXPOSE DIELECTRIC AND BRAIDS AS SHOWN.

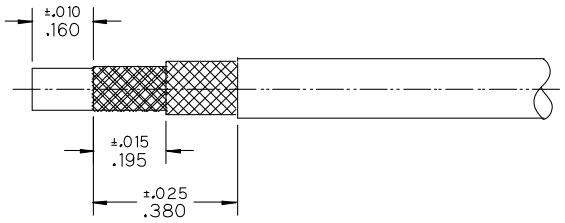

2. A. SLIDE CLAMP NUT OVER CABLE AS SHOWN.
   B. INSERT CABLE INTO SOLDER FERRULE UNTIL INNER BRAID SEATS THEN SOLDER CABLE BRAIDS WHERE SHOWN.
   C. TRIM CABLE DIELECTRIC FLUSH WITH FACE OF SOLDER FERRULE.
   D. SLIDE DIELECTRIC STOP (∅.144 OD) OVER CABLE CENTER CONDUCTOR AND SOLDER CONTACT FLUSH TO STOP TO DIMENSION SHOWN.
   E. SLIDE FORWARD INSULATOR & DIELECTRIC BEAD (∅.158 OD) ONTO CONTACT.

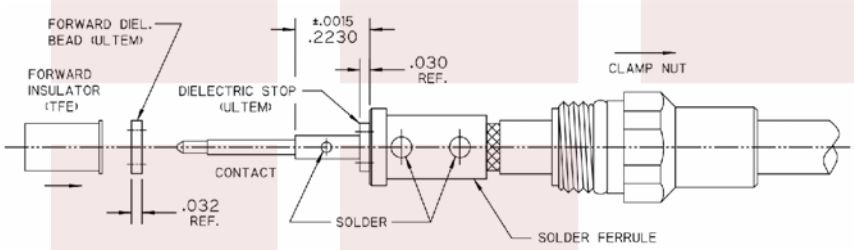

3. INSERT CABLE/CONTACT SUB-ASSEMBLY INTO CONNECTOR UNTIL SEATED AND TIGHTEN CLAMP NUT TO 25-35 IN-LBS.

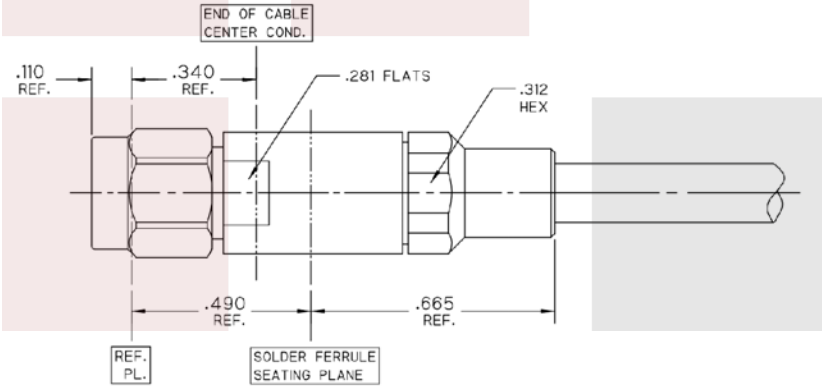

Copyright © 2018

SMA Male Connector Clamp/Solder Attachment For LL160 Cable from Fairview Microwave is in-stock and available to ship same-day. All of our RF/microwave products are available off-the-shelf from our ISO 9001:2008 certified facilities in Allen, Texas. Fairview Microwave is RF on-demand.

For additional information on this product, please click the following link: SMA Male Connector Clamp/Solder Attachment For LL160 Cable FMCN1465

URL: https://www.fairviewmicrowave.com/sma-male-ll160-connector-fmcn1465-p.aspx

The information contained in this document is accurate to the best of our knowledge and representative of the part described herein. It may be necessary to make modifications to the part and/or the documentation of the part, in order to implement improvements. Fairview Microwave reserves the right to make such changes as required. Unless otherwise stated, all specifications are nominal. Fairview Microwave does not make any representation or warranty regarding the suitability of the part described herein for any particular purpose, and Fairview Microwave does not assume any liability arising out of the use of any part or documentation.

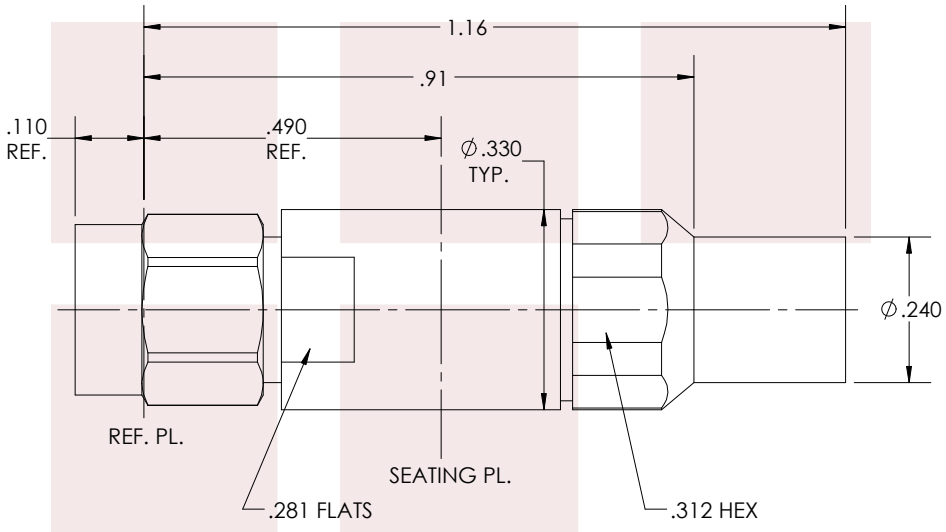

STANDARD TOLERANCES
.X ±0.2
.XX ±0.01
.XXX ±0.005

*STANDARD TOLERANCES APPLY ONLY TO DIMENSIONS IN INCHES

FAIRVIEW MICROWAVE INC. ALLEN, TX 75013 WWW.FAIRVIEWMICROWAVE.COM					NOTES: 1. UNLESS OTHERWISE SPECIFIED ALL DIMENSIONS ARE NOMINAL. 2. ALL SPECIFICATIONS ARE SUBJECT TO CHANGE WITHOUT NOTICE AT ANY TIME. 3. DIMENSIONS ARE IN INCHES [mm].
TITLE SMA Male Connector Clamp/Solder Attachment For LL160 Cable		DWG NO FMCN1465		CAGE CODE 3FKR5	
	CAD FILE 01/08/18	SHEET	SCALE N/A	SIZE A	GF0006

301 Leora Ln., Suite 100, Lewisville, TX 75056 | Tel: 1-800-715-4396 / (972) 649-6678 / Fax: (972) 649-6689

Copyright © 2018

Fairview Microwave
RF COMPONENTS ON DEMAND. Done!

FMCN1471
DATA SHEET

N Male Connector Clamp/Solder Attachment For LL160 Cable



Type N male connector with clamp/solder attachment for LL160, part number FMCN1471, from Fairview Microwave is in-stock and ships same day. This type N male connector operates up to a maximum frequency of 18 GHz and offers excellent VSWR of 1.16:1.

Fairview's type N male connector FMCN1471 datasheet specifications and outline drawing are shown in this PDF below. Our extensive offering of RF, microwave and millimeter wave connectors allows designers to configure and customize their signal connections however they like. From providing an I/O for a board design to creating a custom cable assembly configuration, Fairview Microwave has a connector solution to meet your needs. Fairview Microwave also has the expertise to build your custom cable assemblies for you and ship them same-day.

Configuration:

- N Male Connector
- 50 Ohms
- Straight Body Geometry
- LL160 Interface Type
- Clamp/Solder Attachment

Features:

- Operating Frequency of 18 GHz Max.
- Excellent VSWR of 1.16:1
- Gold Plated Beryllium Copper Contact
- Contact plating according to ASTM-B488

Applications:

- General Purpose Test
- Custom Cable Assemblies

Electrical Specifications

Description	Min	Typ	Max	Units
Frequency Range	DC		18	GHz
VSWR			1.16:1	
DWV (AC)			1,500	Vrms

Mechanical Specifications

Weight 1.128 lbs [511.65 g]

Material Specifications

Description	Material	Plating
Contact	Beryllium Copper	Gold ASTM-B488
Insulation	PTFE	
Body	Passivated Stainless Steel	
Coupling Nut	Passivated Stainless Steel	
Gasket	Silicone Rubber	
Crimp Sleeve	Brass	Gold ASTM-B488
O-Ring	Silicone Rubber	

Environmental Specifications

Temperature

Operating Range -65 to +165 deg C

Compliance Certifications (see product page for current document)

Plotted and Other Data

Notes:

Fairview Microwave
301 Leora Ln., Suite 100
Lewisville, TX 75056
Tel: 1-800-715-4396 / (972) 649-6678
Fax: (972) 649-6689
www.fairviewmicrowave.com
sales@fairviewmicrowave.com

Copyright © 2018

Assembly Instruction

1. TRIM CABLE TO EXPOSE DIELECTRIC AND BRAIDS AS SHOWN.

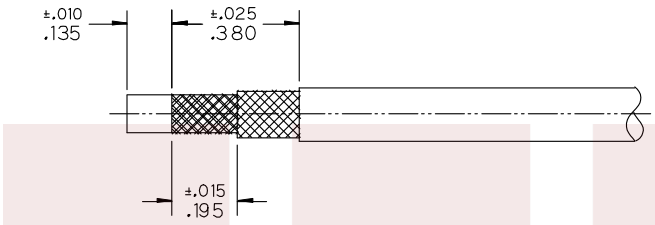

2. A. INSTALL O-RING ONTO CLAMP NUT WHERE SHOWN AND SLIDE CLAMP NUT OVER CABLE IN ORIENTATION SHOW.
   B. INSERT CABLE INTO SOLDER FERRULE UNTIL INNER BRAID SEATS THEN SOLDER BRAIDS TO FERRULE WHERE SHOWN.
   C. TRIM CABLE DIELECTRIC FLUSH WITH FACE OF SOLDER FERRULE.

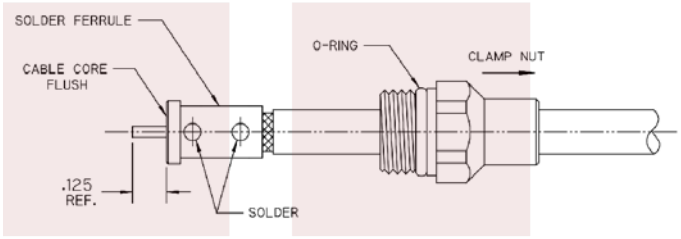

3. A. SLIDE ULTEM DIELECTRIC STOP OVER CABLE CENTER CONDUCTOR AGAINST SOLDER FERRULE AS SHOWN.
   B. SOLDER CONTACT FLUSH AGAINST STOP TO DIMENSION SHOWN.

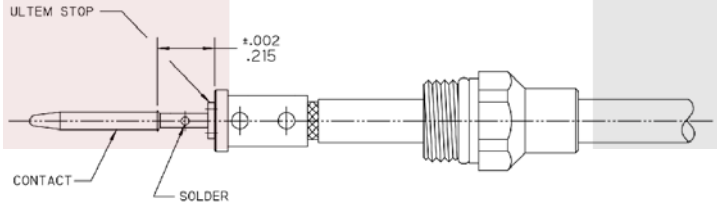

Copyright © 2018

4. SLIDE BUSHING, FORWARD ULTEM STOP & FORWARD TEFLON INSULATOR OVER CONTACT AS SHOWN.
(NOTE: ORIENT BUSHING WITH LARGER DIAMETER C'BORE TOWARD SOLDER FERRULE. ORIENT FORWARD TFE INSULATOR WITH SHOULDER TOWARD STOP).

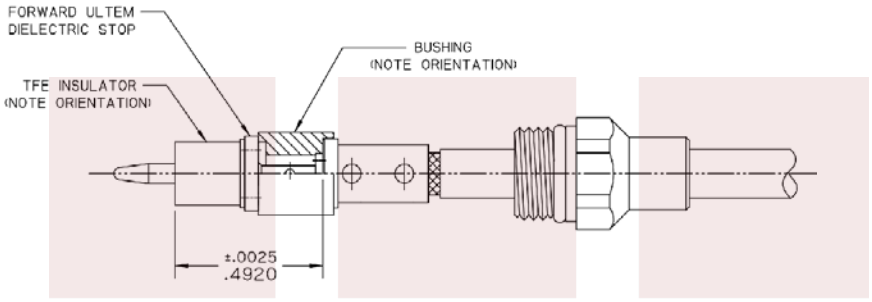

5. INSERT CABLE/CONTACT SUB-ASSEMBLY INTO CONNECTOR UNTIL SEATED AND TIGHTEN CLAMP NUT TO 35-45 IN-LBS..

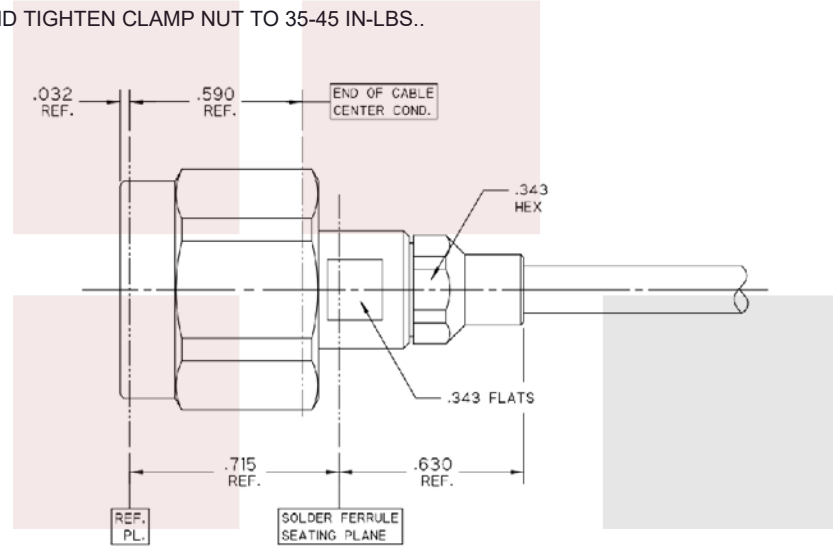

N Male Connector Clamp/Solder Attachment For LL160 Cable from Fairview Microwave is in-stock and available to ship same-day. All of our RF/microwave products are available off-the-shelf from our ISO 9001:2008 certified facilities in Allen, Texas. Fairview Microwave is RF on-demand.

For additional information on this product, please click the following link: N Male Connector Clamp/Solder Attachment For LL160 Cable FMCN1471

URL: https://www.fairviewmicrowave.com/n-male-ll160-connector-fmcn1471-p.aspx

The information contained in this document is accurate to the best of our knowledge and representative of the part described herein. It may be necessary to make modifications to the part and/or the documentation of the part, in order to implement improvements. Fairview Microwave reserves the right to make such changes as required. Unless otherwise stated, all specifications are nominal. Fairview Microwave does not make any representation or warranty regarding the suitability of the part described herein for any particular purpose, and Fairview Microwave does not assume any liability arising out of the use of any part or documentation.

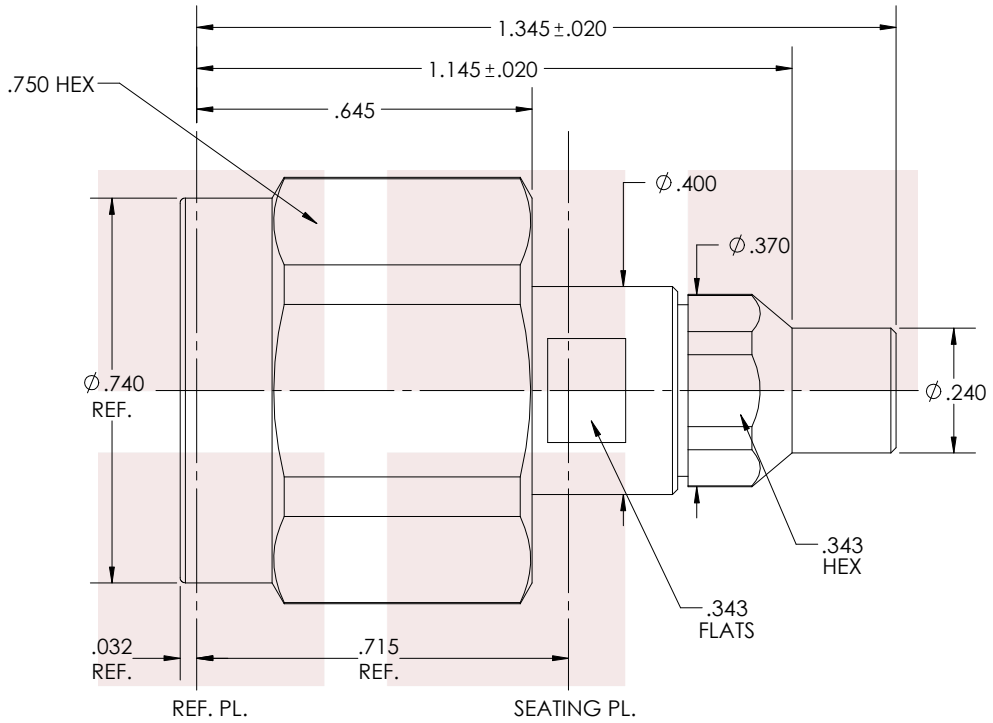

STANDARD TOLERANCES
.X ±0.2
.XX ±0.01
.XXX ±0.005

*STANDARD TOLERANCES APPLY ONLY TO DIMENSIONS IN INCHES

FAIRVIEW MICROWAVE INC. ALLEN, TX 75013 WWW.FAIRVIEWMICROWAVE.COM	NOTES: 1. UNLESS OTHERWISE SPECIFIED ALL DIMENSIONS ARE NOMINAL. 2. ALL SPECIFICATIONS ARE SUBJECT TO CHANGE WITHOUT NOTICE AT ANY TIME. 3. DIMENSIONS ARE IN INCHES [mm].				
TITLE N Male Connector Clamp/Solder Attachment For LL160 Cable	DWG NO FMCN1471		CAGE CODE 3FKR5		
	CAD FILE 01/11/18	SHEET	SCALE N/A	SIZE A	GF0006

301 Leora Ln., Suite 100, Lewisville, TX 75056 | Tel: 1-800-715-4396 / (972) 649-6678 / Fax: (972) 649-6689

Copyright © 2018

Fairview Microwave
an INFINITE brand

LL160 DATA SHEET

LL160 Low Loss Flexible Coax Cable Green FEP Jacket

LL160 low loss coaxial cable with flat strip foil braid is part of our full line of RF components available for same-day shipping from Fairview Microwave. The LL160 coaxial cable features a low loss dielectric with an 82.5% velocity of propagation (VoP). These low loss coax features combine to make Fairview Microwave's cable well suited for applications that require a high-performance RF cable. Applications for coax with low loss include long cable lengths where the attenuation from standard solid dielectric coax would impact system performance.

The 0.160 inch diameter coax has a durable FEP outer jacket that makes this cable appropriate for a wide range of indoor or outdoor applications. The flat foil braid provides superior shielding and the expanded PTFE dielectric contributes to the lower attenuation and improves the power handling of this coax cable.

Our datasheet specifications and drawing with dimensions for the LL160 coax cable are shown below in this PDF. In addition to bulk RF cable, Fairview Microwave offers cable assemblies using LL160 with a wide selection of connector options available. See our web site to find the right connector cable combination for your application.



Configuration:

- Low Loss Flexible Cable
- 3 Shield(s)

Features:

- Low Loss dielectric 82.5% VoP
- Phase stable Expanded PTFE dielectric
- Double Shielded with metalized polyimide interlayer
- Shielding >95dB
- FEP Jacket

Applications:

- Low Loss system cables
- Rugged environments
- Test systems with long cable runs
- ATE, Automated Test Equipment
- Antenna Jumpers

Electrical Specifications

Description	Min	Typ	Max	Units
Frequency Range	DC		18	GHz
Impedance		50		Ohms
Structural VSWR		1.35:1		
Velocity of Propagation		82.5		%
Nominal Capacitance		25 [82.02]		pF/ft [pF/m]

Performance by Frequency Band

Description	F1	F2	F3	F4	F5	Units
Frequency	0.4	1	2	2.4	3	GHz
Attenuation, Max	6.9 22.64	11 36.09	15.8 51.84	17.3 56.76	19.4 63.65	dB/100ft dB/100m
Attenuation, Typ	6.3 20.67	10 32.81	14.3 46.92	15.7 51.51	17.7 58.07	dB/100ft dB/100m
Power In (CW), Max	900	560			310	Watts

Description	F6	F7	F8	F9	F10	Units
Frequency	5	10	18			GHz
Attenuation, Max dB/100m	25.4 83.33	36.7 120.41	50.6 166.01			dB/100ft
Attenuation, Typ dB/100m	23.1 75.79	33.4 109.58	46 150.92			dB/100ft

Fairview Microwave
301 Leora Ln., Suite 100
Lewisville, TX 75056
Tel: 1-800-715-4396 / (972) 649-6678
Fax: (972) 649-6689
www.fairviewmicrowave.com
sales@fairviewmicrowave.com

Copyright © 2019

Power In (CW), Max	240	160	115	Watts

Electrical Specification Notes:
Power handling derates linearly to 0% from +25°C to +250°C.

Mechanical Specifications

Diameter	0.16 in [4.06 mm]
Weight	0.027 lbs/ft [0.04 Kg/m]
Min. Bend Radius (Repeated)	0.8 in [20.32 mm]

Construction Specifications

Description	Material and Plating	Diameter
Inner Conductor	Copper, Silver, 1 Strands	0.04 in [1.02 mm]
Conductor Type	Solid	
Dielectric	PTFE	0.11 in [2.79 mm]
First Shield	Silver Plated Copper 90% min. coverage	0.116 in [2.95 mm]
Second Shield	Aluminum Polyester	0.122 in [3.1 mm]
Third Shield	Silver Plated Copper 90% min. coverage	0.14 in [3.56 mm]
Jacket	FEP, Green	0.16 in [4.06 mm]

Environmental Specifications

Temperature

Operating Range	-55 to +200 deg C

Compliance Certifications (see product page for current document)

Plotted and Other Data

Notes:

LL160 Low Loss Flexible Coax Cable Green FEP Jacket from Fairview Microwave has same day shipment for domestic and International orders. Our RF, microwave and fiber optic products maintain a 99% availability and are part of the broadest selection in the industry.

Click the following link to obtain additional part information: LL160 Low Loss Flexible Coax Cable Green FEP Jacket LL160

URL: https://www.fairviewmicrowave.com/ll160-low-loss-flexible-coax-cable-fep-jacket-ll160-p.aspx

The information contained in this document is accurate to the best of our knowledge and representative of the part described herein. It may be necessary to make modifications to the part and/or the documentation of the part, in order to implement improvements. Fairview Microwave reserves the right to make such changes as required. Unless otherwise stated, all specifications are nominal. Fairview Microwave does not make any representation or warranty regarding the suitability of the part described herein for any particular purpose, and Fairview Microwave does not assume any liability arising out of the use of any part or documentation.

REVISIONS			
REV.	DESCRIPTION	DATE	APPROVED
A	INITIAL RELEASE	5/4/2020	S.ELLIS

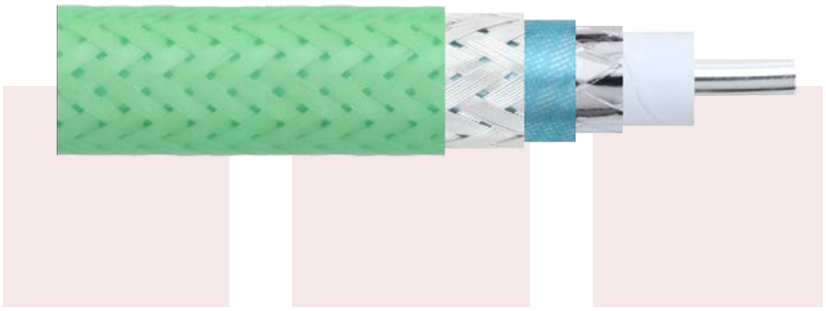

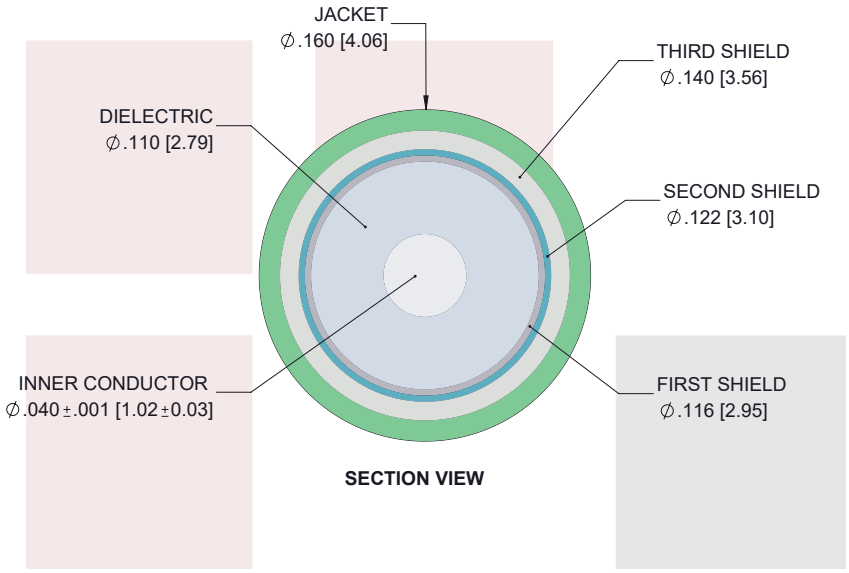

SECTION VIEW

THESE COMMODITIES, TECHNOLOGY OR SOFTWARE WERE EXPORTED FROM THE UNITED STATES IN ACCORDANCE WITH THE EXPORT ADMINISTRATION REGULATIONS. DIVERSION CONTRARY TO U.S. LAW PROHIBITED.

Fairview Microwave™
an INFINITE brand

TITLE

LL160 Low Loss Flexible Coax Cable Green FEP Jacket

UNLESS OTHERWISE SPECIFIED LEADING DIMENSIONS ARE INCHES
DIMENSIONS IN [ ] ARE MILLIMETERS

TOLERANCES:

.X = ±.2 [5.08] FRACTIONS
.XX = ±.02 [.51] ± 1/32
.XXX = ±.005 [.13] ANGLES ± 1°

CABLE LENGTH (L) TOLERANCES:

L ≤ 12 [305] = +1 [25] / -0
12 [305] < L ≤ 60 [1524] = +2 [51] / -0
60 [1524] < L ≤ 120 [3048] = +4 [102] / -0
120 [3048] < L ≤ 300 [7620] = +6 [152] / -0
300 [7620] < L = +5%L / -0

THIRD-ANGLE PROJECTION

THE INFORMATION AND DESIGN IN THIS DOCUMENT IS THE PROPERTY OF FAIRVIEW MICROWAVE CORPORATION. ALL RIGHTS RESERVED.

SHEET 1 OF 1

ALL DIMENSIONS SHOWN ARE FOR REFERENCE ONLY.

SCALE N/A

SIZE	CAGE CODE	DRAWN BY	ITEM NO.	REV
A	3FKR5	K.DANG	LL160	A

T-Rev.D