Fairview Microwave
an INFINITE brand

TIMES MICROWAVE SYSTEMS

TC-400-BM-X DATA SHEET

BNC Male Connector Crimp/Solder Attachment for LMR-400 Cable



Times Microwave Systems Connector Specification

BNC male connector with crimp/solder attachment for LMR-400, part number TC-400-BM-X, from Fairview Microwave is in-stock and ships same day. This BNC male connector operates up to a maximum frequency of 6 GHz and offers good VSWR of 1.3:1.

Fairview's BNC male connector TC-400-BM-X datasheet specifications and outline drawing are shown in this PDF below. Our extensive offering of RF, microwave and millimeter wave connectors allows designers to configure and customize their signal connections however they like. From providing an I/O for a board design to creating a custom cable assembly configuration, Fairview Microwave has a connector solution to meet your needs. Fairview Microwave also has the expertise to build your custom cable assemblies for you and ship them same-day.

Electrical Specifications

Description	Min	Typ	Max	Units
Frequency Range	DC		6	GHz
VSWR			1.3:1	
Insertion Loss			0.25	dB
DWV (AC)			1,500	Vrms
Insulation Resistance	5,000			MOhms

Mechanical Specifications

Size

Length	1.91 in [48.51 mm]
Width/Dia.	0.55 in [13.97 mm]
Weight	0.083 lbs [37.65 g]
Mating Cycles	500 Cycles

Material Specifications

Description	Material	Plating
Contact	Brass	Gold 50 microns
Insulation	PTFE	
Body	Brass	Tri-Metal 80 microns
Coupling Nut	Brass	Tri-Metal 80 microns
Gasket	Silicone	
Crimp Sleeve	Brass	Tri-Metal 80 microns

Configuration:

- BNC Male Connector
- 50 Ohms
- Straight Body Geometry
- LMR-400 Interface Type
- Crimp/Solder Attachment

Features:

- Operating Frequency of 6 GHz Max.
- Good VSWR of 1.3:1
- Gold Plated Brass Contact
- 50 microns contact plating

Applications:

- General Purpose Test
- Custom Cable Assemblies

Fairview Microwave
301 Leora Ln., Suite 100
Lewisville, TX 75056
Tel: 1-800-715-4396 / (972) 649-6678
Fax: (972) 649-6689
www.fairviewmicrowave.com
sales@fairviewmicrowave.com

Copyright © 2019

Environmental Specifications

Temperature

Operating Range	-55 to +125 deg C
Shock	MIL-STD 202G, Meth.213, Cond G
Vibration	MIL-STD 202G, Meth.204, Cond B
Thermal Shock	MIL-STD 202G, Meth.107, Cond B

Compliance Certifications (see product page for current document)

Plotted and Other Data

Notes:

BNC Male Connector Crimp/Solder Attachment for LMR-400 Cable from Fairview Microwave is in-stock and available to ship same-day. All of our RF/microwave products are available off-the-shelf from our ISO 9001:2008 certified facilities in Lewisville, Texas. Fairview Microwave is RF on-demand.

For additional information on this product, please click the following link: BNC Male Connector Crimp/Solder Attachment for LMR-400 Cable TC-400-BM-X

URL: https://www.fairviewmicrowave.com/bnc-male-lmr-400-connector-tc-400-bm-x-p.aspx

The information contained in this document is accurate to the best of our knowledge and representative of the part described herein. It may be necessary to make modifications to the part and/or the documentation of the part, in order to implement improvements. Fairview Microwave reserves the right to make such changes as required. Unless otherwise stated, all specifications are nominal. Fairview Microwave does not make any representation or warranty regarding the suitability of the part described herein for any particular purpose, and Fairview Microwave does not assume any liability arising out of the use of any part or documentation.

REVISIONS			
REV.	DESCRIPTION	DATE	APPROVED
A	PCR TC-400-BM-X 20191204	12/09/19	S.ELLIS

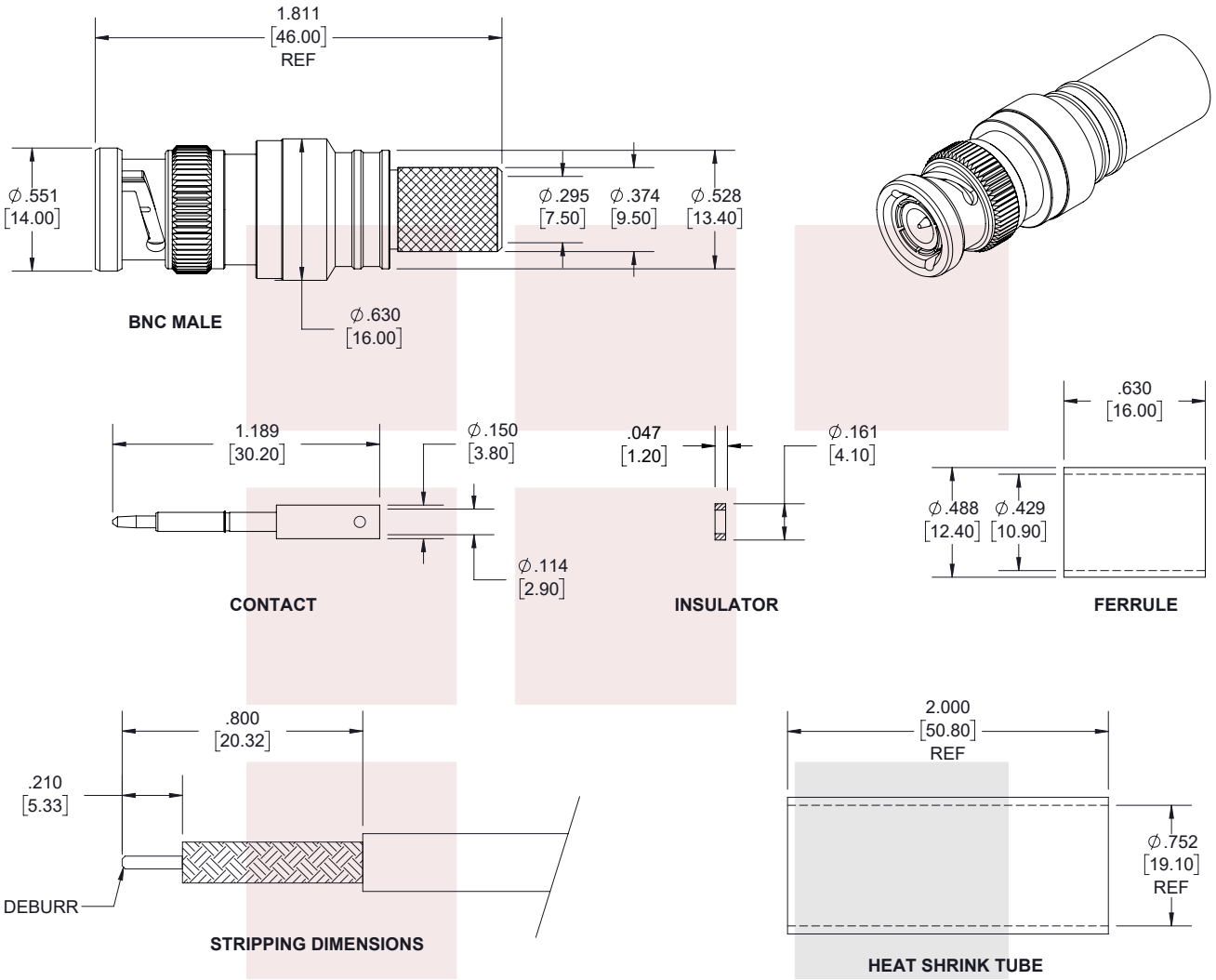

NOTES:

1. CABLE ATTACHMENT:
   - OUTER: CRIMP.
   - INNER: SOLDER.
2. CRIMP SIZE REQUIRED:
   - FERRULE: .429 [10.90] HEX. CRIMP TOOL.
   - CONTACT: SOLDER.

THESE COMMODITIES, TECHNOLOGY OR SOFTWARE WERE EXPORTED FROM THE UNITED STATES IN ACCORDANCE WITH THE EXPORT ADMINISTRATION REGULATIONS. DIVERSION CONTRARY TO U.S. LAW PROHIBITED.

Fairview Microwave
an INFINITE brand

TITLE

BNC Male Connector Crimp/Solder Attachment for LMR-400 Cable

UNLESS OTHERWISE SPECIFIED LEADING DIMENSIONS ARE INCHES
DIMENSIONS IN [ ] ARE MILLIMETERS

TOLERANCES:

.X = ±.2 [5.08] FRACTIONS
.XX = ±.02 [.51] ± 1/32
.XXX = ±.005 [.13] ANGLES ± 1°

CABLE LENGTH (L) TOLERANCES:

L ≤ 12 [305] = +1 [25] / -0
12 [305] < L ≤ 60 [1524] = +2 [51] / -0
60 [1524] < L ≤ 120 [3048] = +4 [102] / -0
120 [3048] < L ≤ 300 [7620] = +6 [152] / -0
300 [7620] < L = +5%L / -0

THIRD-ANGLE PROJECTION

THE INFORMATION AND DESIGN IN THIS DOCUMENT IS THE PROPERTY OF FAIRVIEW MICROWAVE CORPORATION. ALL RIGHTS RESERVED.

SHEET 1 OF 1

ALL DIMENSIONS SHOWN ARE FOR REFERENCE ONLY.

SCALE N/A

SIZE	CAGE CODE	DRAWN BY	PART NUMBER	REV
A	3FKR5	K.DANG	TC-400-BM-X	A

T-Rev.D

Fairview Microwave
an INFINITE brand

TIMES MICROWAVE SYSTEMS

TC-400-BM-X DATA SHEET

BNC Male Connector Crimp/Solder Attachment for LMR-400 Cable



Times Microwave Systems Connector Specification

BNC male connector with crimp/solder attachment for LMR-400, part number TC-400-BM-X, from Fairview Microwave is in-stock and ships same day. This BNC male connector operates up to a maximum frequency of 6 GHz and offers good VSWR of 1.3:1.

Fairview's BNC male connector TC-400-BM-X datasheet specifications and outline drawing are shown in this PDF below. Our extensive offering of RF, microwave and millimeter wave connectors allows designers to configure and customize their signal connections however they like. From providing an I/O for a board design to creating a custom cable assembly configuration, Fairview Microwave has a connector solution to meet your needs. Fairview Microwave also has the expertise to build your custom cable assemblies for you and ship them same-day.

Electrical Specifications

Description	Min	Typ	Max	Units
Frequency Range	DC		6	GHz
VSWR			1.3:1	
Insertion Loss			0.25	dB
DWV (AC)			1,500	Vrms
Insulation Resistance	5,000			MOhms

Mechanical Specifications

Size

Length	1.91 in [48.51 mm]
Width/Dia.	0.55 in [13.97 mm]
Weight	0.083 lbs [37.65 g]
Mating Cycles	500 Cycles

Material Specifications

Description	Material	Plating
Contact	Brass	Gold 50 microns
Insulation	PTFE	
Body	Brass	Tri-Metal 80 microns
Coupling Nut	Brass	Tri-Metal 80 microns
Gasket	Silicone	
Crimp Sleeve	Brass	Tri-Metal 80 microns

Configuration:

- BNC Male Connector
- 50 Ohms
- Straight Body Geometry
- LMR-400 Interface Type
- Crimp/Solder Attachment

Features:

- Operating Frequency of 6 GHz Max.
- Good VSWR of 1.3:1
- Gold Plated Brass Contact
- 50 microns contact plating

Applications:

- General Purpose Test
- Custom Cable Assemblies

Fairview Microwave
301 Leora Ln., Suite 100
Lewisville, TX 75056
Tel: 1-800-715-4396 / (972) 649-6678
Fax: (972) 649-6689
www.fairviewmicrowave.com
sales@fairviewmicrowave.com

Copyright © 2019

Environmental Specifications

Temperature

Operating Range	-55 to +125 deg C
Shock	MIL-STD 202G, Meth.213, Cond G
Vibration	MIL-STD 202G, Meth.204, Cond B
Thermal Shock	MIL-STD 202G, Meth.107, Cond B

Compliance Certifications (see product page for current document)

Plotted and Other Data

Notes:

BNC Male Connector Crimp/Solder Attachment for LMR-400 Cable from Fairview Microwave is in-stock and available to ship same-day. All of our RF/microwave products are available off-the-shelf from our ISO 9001:2008 certified facilities in Lewisville, Texas. Fairview Microwave is RF on-demand.

For additional information on this product, please click the following link: BNC Male Connector Crimp/Solder Attachment for LMR-400 Cable TC-400-BM-X

URL: https://www.fairviewmicrowave.com/bnc-male-lmr-400-connector-tc-400-bm-x-p.aspx

The information contained in this document is accurate to the best of our knowledge and representative of the part described herein. It may be necessary to make modifications to the part and/or the documentation of the part, in order to implement improvements. Fairview Microwave reserves the right to make such changes as required. Unless otherwise stated, all specifications are nominal. Fairview Microwave does not make any representation or warranty regarding the suitability of the part described herein for any particular purpose, and Fairview Microwave does not assume any liability arising out of the use of any part or documentation.

REVISIONS			
REV.	DESCRIPTION	DATE	APPROVED
A	PCR TC-400-BM-X 20191204	12/09/19	S.ELLIS

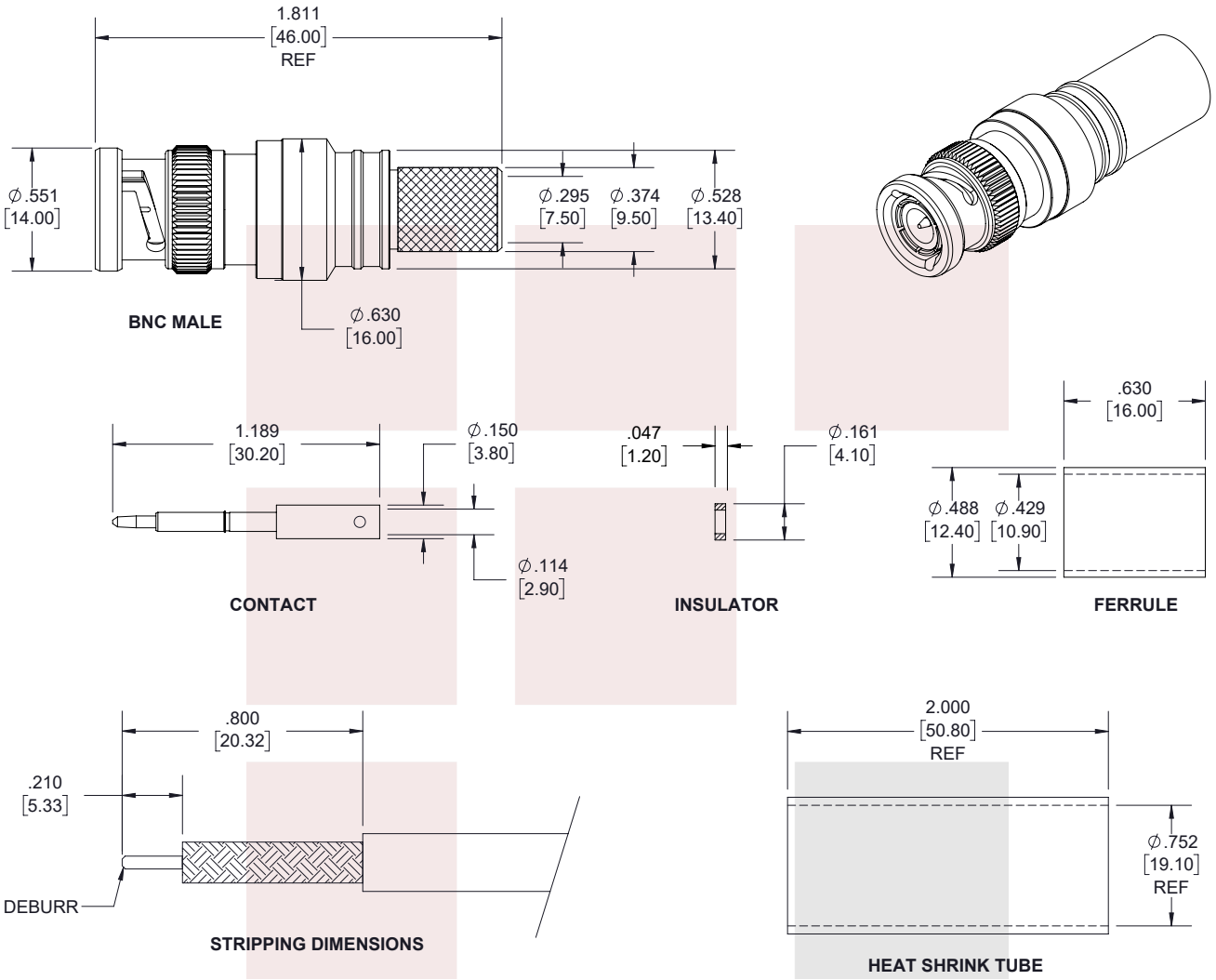

NOTES:

1. CABLE ATTACHMENT:
   - OUTER: CRIMP.
   - INNER: SOLDER.
2. CRIMP SIZE REQUIRED:
   - FERRULE: .429 [10.90] HEX. CRIMP TOOL.
   - CONTACT: SOLDER.

THESE COMMODITIES, TECHNOLOGY OR SOFTWARE WERE EXPORTED FROM THE UNITED STATES IN ACCORDANCE WITH THE EXPORT ADMINISTRATION REGULATIONS. DIVERSION CONTRARY TO U.S. LAW PROHIBITED.

Fairview Microwave
an INFINITE brand

TITLE

BNC Male Connector Crimp/Solder Attachment for LMR-400 Cable

UNLESS OTHERWISE SPECIFIED LEADING DIMENSIONS ARE INCHES
DIMENSIONS IN [ ] ARE MILLIMETERS

TOLERANCES:

.X = ±.2 [5.08] FRACTIONS
.XX = ±.02 [.51] ± 1/32
.XXX = ±.005 [.13] ANGLES ± 1°

CABLE LENGTH (L) TOLERANCES:

L ≤ 12 [305] = +1 [25] / -0
12 [305] < L ≤ 60 [1524] = +2 [51] / -0
60 [1524] < L ≤ 120 [3048] = +4 [102] / -0
120 [3048] < L ≤ 300 [7620] = +6 [152] / -0
300 [7620] < L = +5%L / -0

THIRD-ANGLE PROJECTION

THE INFORMATION AND DESIGN IN THIS DOCUMENT IS THE PROPERTY OF FAIRVIEW MICROWAVE CORPORATION. ALL RIGHTS RESERVED.

SHEET 1 OF 1

ALL DIMENSIONS SHOWN ARE FOR REFERENCE ONLY.

SCALE N/A

SIZE	CAGE CODE	DRAWN BY	PART NUMBER	REV
A	3FKR5	K.DANG	TC-400-BM-X	A

T-Rev.D

TCOM-400-FR Low PIM Flexible Coax Cable Black FRPE Jacket Fire Rated

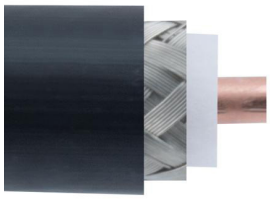

TCOM-400-FR

Configuration

- Low PIM, Fire Rated Flexible Cable
- 3 Shield(s)

Features

- Lightweight and Extremely Flexible
- PIM < –155 dBc
- RF Shielding >100 dB
- Low Loss Dielectric 85% VoP
- Fire Rated Jacket
- Non-Halogen (Non-Toxic)

Applications

- Wireless Base Station Interconnect
- Distributed Antenna Systems (DAS)
- Antenna Jumpers
- UL/NEC & CSA rating of ‘CMR’ and ‘FT4’
- Low Smoke Requirements
- Small Cell
- Indoor-Riser CMR

Description

TCOM-400 low PIM coax cable from Fairview Microwave is only one of many radio frequency coaxial cable types specifically stocked to be ready for same business day shipment. Fairview Microwave’s TCOM-400-FR coax cable is manufactured in a flexible design and has a 50 Ohm impedance. This flexible 50 Ohm coax cable is constructed with a polyethylene jacket of 0.405 inch diameter. The maximum passive intermodulation of this low PIM cable is -155 dBc.

Fairview Microwave’s TCOM-400-FR flexible coax cable with a polyethylene jacket is rated for a 10 GHz maximum operating frequency. This 50 Ohm flexible coax cable is built with a shield count of 3. Our low PIM RF coaxial cable has a solid conductor made of copper. The black-colored coax RF cable has a typical insertion loss/attenuation of 1.6, 2.9, 4.2, 6.4, 10.5 and 15.7 dB/100ft at frequencies of 150 MHz, 450 MHz, 900 MHz, 2000 MHz, 5000 MHz, and 10000 MHz respectively.

The TCOM-400 coax cable with foam polyethylene dielectric can operate at temperatures ranging from -40 to +85 deg C. Additional specifications for this TCOM-400-FR RF coaxial cable are on our downloadable PDF datasheet above. Our low PIM coaxial cable has a dielectric withstanding voltage of 2500 Vdc. This low PIM RF cable has a one time minimum bend radius of 1.0 inches and a repeat minimum bend radius of 4.0 inches. Our flexible 50 Ohm coax cable has a peak power rating of 16000 watts.

TCOM-400 low PIM RF cable is part of more than one million RF, microwave, and millimeter wave parts in stock at Fairview Microwave. This TCOM-400 coax cable is ready to buy and can be shipped worldwide. Fairview Microwave also maintains a wide selection of other radio frequency and coaxial cable types that ship the same business day from our warehouse in the United States, as with the rest of our other RF/microwave and millimeter wave components.

Electrical Specifications

Description	Minimum	Typical	Maximum	Units
Frequency Range	DC		10	GHz
Impedance		50		Ohms
Velocity of Propagation		85		%
Time Delay		1.2 [3.94]		ns/ft [ns/m]
Shielding Effectiveness	100			dB

© 2023 Infinite Electronics, Inc. Fairview Microwave is a registered trademark of Infinite Electronics, Inc.
+1 (866) 839-4711 | sales@fairviewmicrowave.com | fairviewmicrowave.com

TCOM-400-FR Low PIM Flexible Coax Cable Black FRPE Jacket Fire Rated

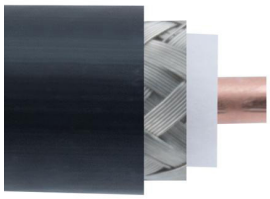

TCOM-400-FR

Electrical Specifications

Description	Minimum	Typical	Maximum	Units
Passive Intermodulation			-155	dBc
Dielectric Withstanding Voltage (DC)			2,500	Vdc
Jacket Spark			8,000	Vrms
Inner Conductor DC Resistance			1.39	Ohms/1000ft
Outer Conductor DC Resistance			1.47	Ohms/1000ft
Nominal Capacitance		23.9 [78.41]		pF/ft [pF/m]
Nominal Inductance		0.06 [0.2]		uH/ft [uH/m]
Input Power (Peak)			16	kWatts

Performance by Frequency Band

Description	F1	F2	F3	F4	F5	Units
Frequency	0.15	0.45	0.9	2	5	GHz
Attenuation, Typ	1.6	2.9	4.2	6.4	10.5	dB/100ft
	5.25	9.51	13.78	21	34.45	dB/100m

Description	F6	F7	F8	F9	F10	Units
Frequency	10					GHz
Attenuation, Typ	15.7					dB/100ft
	51.51					dB/100m

Mechanical Specifications

Diameter	0.405 in [10.29 mm}
Weight	0.08 lbs/ft [0.12 kg/m]
Min. Bend Radius (Installation)	1 in [25.4 mm]
Min. Bend Radius (Repeated)	4 in [101.6 mm]
Bending Moment	0.5 lbs-ft [0.68 N-m]
Tensile Strength	160 lbs [72.57 kg]
Flat Plate Crush	40 lbs/in [0.71 kg/mm]

Construction Specifications

Description	Material and Plating	Diameter
Inner Conductor	Copper Clad Aluminum, 1 Strand	0.108 in [2.74 mm]
Conductor Type	Solid	
Dielectric	PE (F)	0.285 in [7.24 mm]
First Shield	Silver Plated Copper Braid	0.295 in [7.49 mm]
Second Shield	Tinned Copper Braid	0.33 in [8.38 mm]

© 2023 Infinite Electronics, Inc. Fairview Microwave is a registered trademark of Infinite Electronics, Inc.
+1 (866) 839-4711 | sales@fairviewmicrowave.com | fairviewmicrowave.com

TCOM-400-FR Low PIM Flexible Coax Cable Black FRPE Jacket Fire Rated

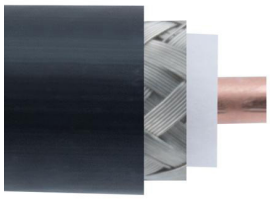

TCOM-400-FR

Construction Specifications

Description	Material and Plating	Diameter
Jacket	FRPE, Black	0.405 in [10.29 mm]

Environmental Specifications

Temperature

Operating Range	-40 to +85 deg C
Installation Range	-40 to +85 deg C
Storage Range	-70 to +85 deg C

Compliance Certifications (see product page for current document)

Plotted and Other Data

Notes:

TCOM-400-FR Low PIM Flexible Coax Cable Black FRPE Jacket Fire Rated from Fairview Microwave is in-stock and available to ship same-day. All of our RF/microwave products are available off-the-shelf from our ISO 9001:2008 certified facilities in Lewisville, Texas. Fairview Microwave is RF on-demand.

For additional information on this product, please click the following link: TCOM-400-FR Low PIM Flexible Coax Cable Black FRPE Jacket Fire Rated TCOM-400-FR

URL: https://www.fairviewmicrowave.com/tcom400fr-low-pim-flexible-coax-cable-frpe-jacket-tcom-400-fr-p.aspx

The information contained within this document is accurate to the best of our knowledge and representative of the part described herein. It may be necessary to make modifications to the part and/or the documentation of the part in order to impliment improvements. Fairview Microwave reserves the right to make such changes as required. Unless otherwise stated, all specifications are nominal. Fairview Microwave does not make any representation or warranty regarding the suitability of the part described herein for any particular purpose, and Fairview Microwave does not assume liability arising out of the use of any part or document.

© 2023 Infinite Electronics, Inc. Fairview Microwave is a registered trademark of Infinite Electronics, Inc.

TCOM-400-FR CAD Drawing

TCOM-400-FR Low PIM Flexible Coax Cable Black FRPE Jacket Fire Rated

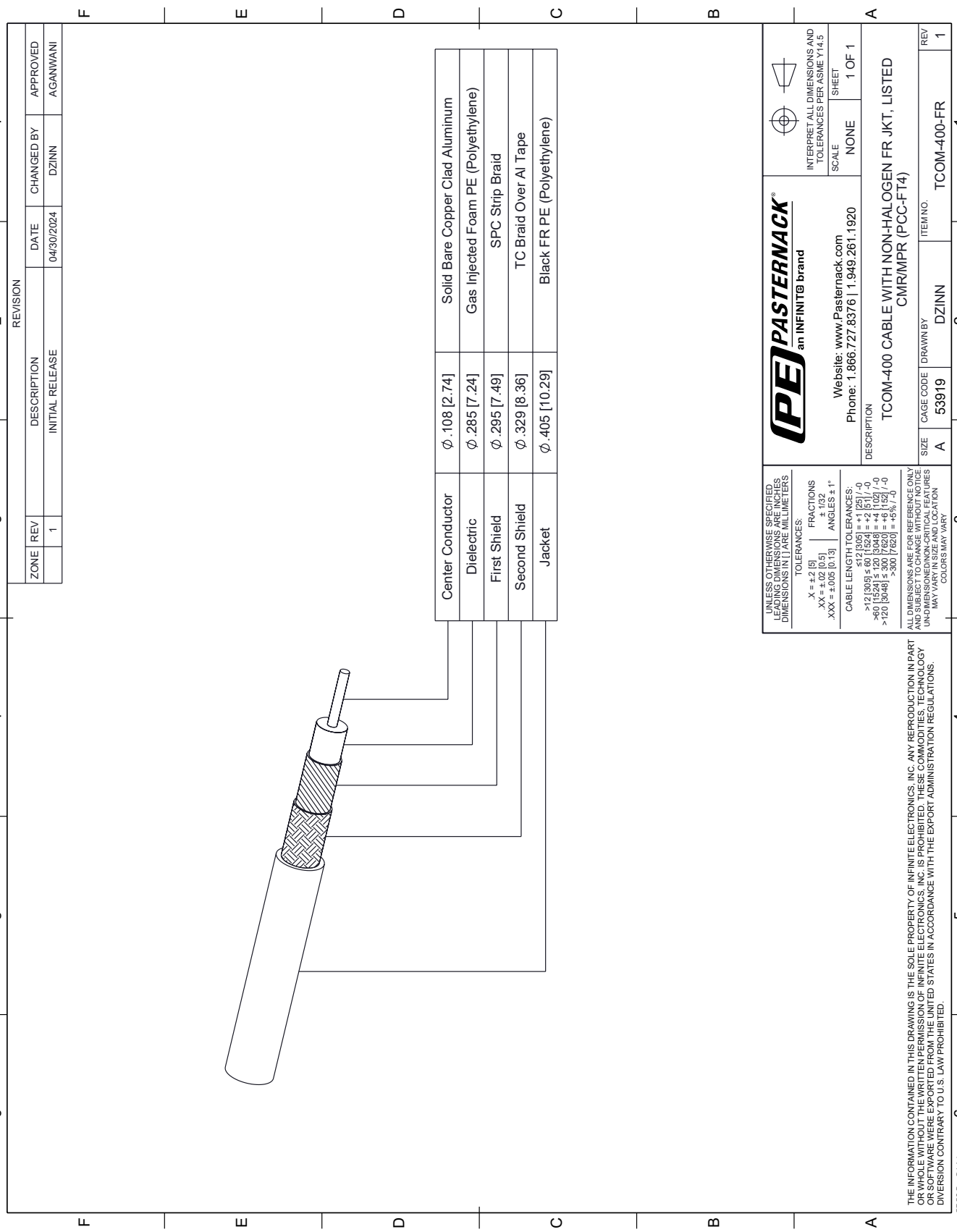

© 2023 Infinite Electronics, Inc. Fairview Microwave is a registered trademark of Infinite Electronics, Inc.