Fairview Microwave
an INFINITE brand

FMCN1185
DATA SHEET

SMA Male Precision Connector Clamp/Solder Attachment for LL335i Cable .490 inch Diameter Body

SMA male precision connector with clamp/solder attachment for LL335i, part number FMCN1185, from Fairview Microwave is in-stock and ships same day. This SMA male connector operates up to a maximum frequency of 18 GHz and offers good VSWR of 1.4:1.

Fairview's SMA male connector FMCN1185 datasheet specifications and outline drawing are shown in this PDF below. Our extensive offering of RF, microwave and millimeter wave connectors allows designers to configure and customize their signal connections however they like. From providing an I/O for a board design to creating a custom cable assembly configuration, Fairview Microwave has a connector solution to meet your needs. Fairview Microwave also has the expertise to build your custom cable assemblies for you and ship them same-day.

Electrical Specifications

Description	Min	Typ	Max	Units
Frequency Range	DC		18	GHz
VSWR			1.4:1	

Mechanical Specifications

Size

Length	1.61 in [40.89 mm]
Width/Dia.	0.491 in [12.47 mm]
Weight	0.045 lbs [20.41 g]

Material Specifications

Description	Material	Plating
Contact	Beryllium Copper	Gold ASTM-B488 50 µin
Insulation	PTFE	
Body	Passivated Stainless Steel	SAE-AMS-2700
Coupling Nut	Passivated Stainless Steel	SAE-AMS-2700
Gasket	Silicone Rubber	

Environmental Specifications

Temperature

Operating Range	-55 to +160 deg C

Compliance Certifications (see product page for current document)

Plotted and Other Data

Notes:



Configuration:

- SMA Male Connector
- MIL-STD-348
- 50 Ohms
- Straight Body Geometry
- LL335i Interface Type
- Clamp/Solder Attachment
- 5/16 Inch Hex
- Precision Design

Features:

- Operating Frequency of 18 GHz Max.
- Good VSWR of 1.4:1
- Gold Plated Beryllium Copper Contact
- Contact plating according to ASTM-B488 50 µin

Applications:

- General Purpose Test
- Precision Test & Measurement
- Custom Cable Assemblies

Fairview Microwave
301 Leora Ln., Suite 100
Lewisville, TX 75056
Tel: 1-800-715-4396 / (972) 649-6678
Fax: (972) 649-6689
www.fairviewmicrowave.com
sales@fairviewmicrowave.com

Copyright © 2019

Assembly Instruction

1. TRIM CABLE AS SHOWN.

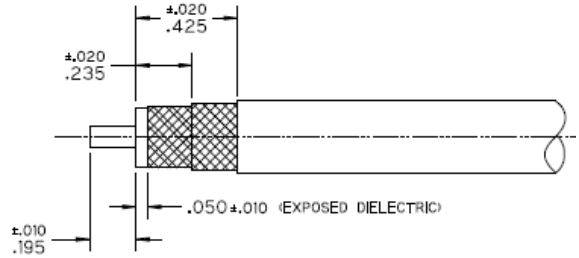

2. SLIDE CLAMP NUT OVER CABLE AS SHOWN. INSERT CABLE INTO SOLDER FERRULE UNTIL CABLE DIELECTRIC IS FLUSH WITH FACE OF FERRULE. THEN SOLDER BOTH CABLE BRAIDS WHERE SHOWN. SLIDE DIELECTRIC STOP OVER CABLE CENTER CONDUCTOR AND SOLDER CONTACT FLUSH AGAINST STOP TO DIMENSION SHOWN.

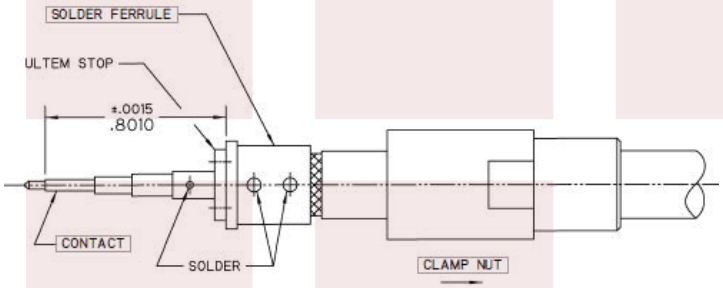

3. INSERT FORWARD INSULATOR INTO CONNECTOR IN ORIENTATION SHOWN. INSERT CABLE/ CONTACT SUB-ASSEMBLY INTO CONNECTOR UNTIL SEATED AND TIGHTEN CLAMP NUT TO 35-45 IN-LBS.

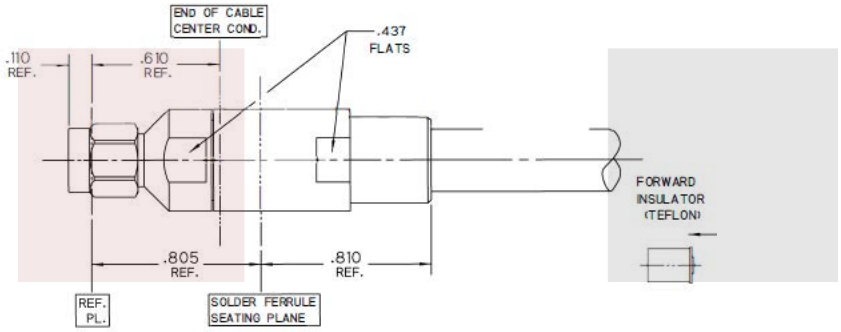

Copyright © 2019

SMA Male Precision Connector Clamp/Solder Attachment for LL335i Cable .490 inch Diameter Body from Fairview Microwave is in-stock and available to ship same-day. All of our RF/microwave products are available off-the-shelf from our ISO 9001:2008 certified facilities in Allen, Texas. Fairview Microwave is RF on-demand.

For additional information on this product, please click the following link: SMA Male Precision Connector Clamp/Solder Attachment for LL335i Cable .490 inch Diameter Body FMCN1185

URL: https://www.fairviewmicrowave.com/sma-male-ll335i-connector-fmcn1185-p.aspx

The information contained in this document is accurate to the best of our knowledge and representative of the part described herein. It may be necessary to make modifications to the part and/or the documentation of the part, in order to implement improvements. Fairview Microwave reserves the right to make such changes as required. Unless otherwise stated, all specifications are nominal. Fairview Microwave does not make any representation or warranty regarding the suitability of the part described herein for any particular purpose, and Fairview Microwave does not assume any liability arising out of the use of any part or documentation.

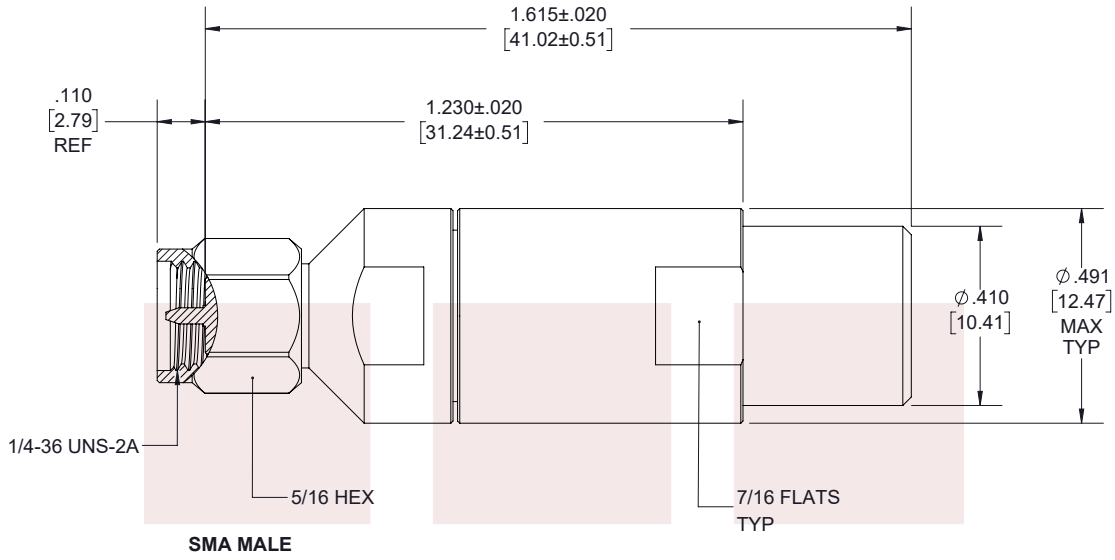

SMA MALE

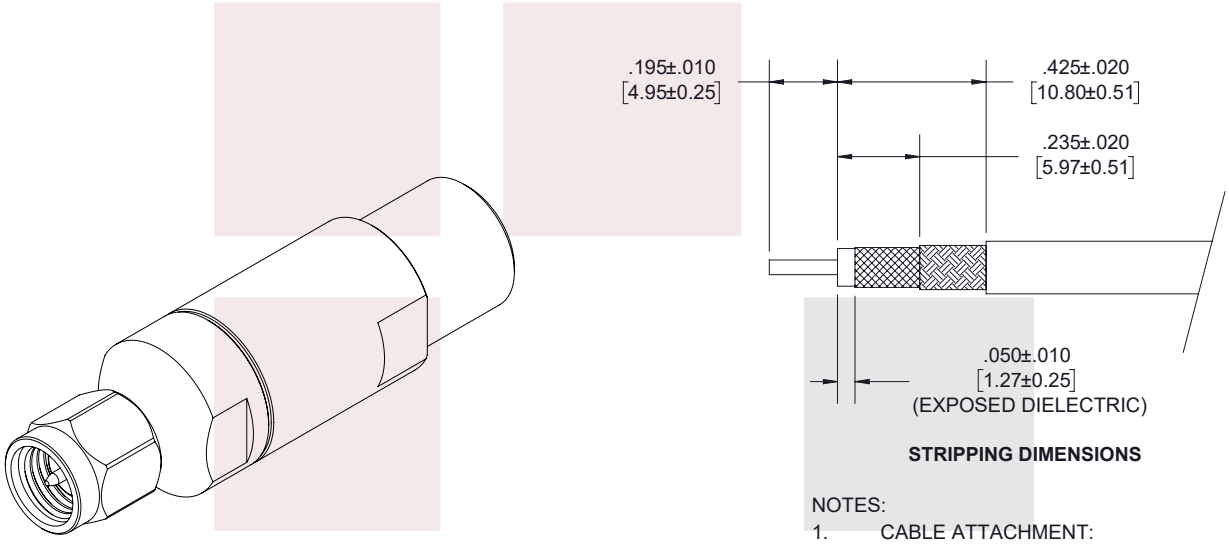

STRIPPING DIMENSIONS

NOTES:
1. CABLE ATTACHMENT:
   - OUTER: CLAMP.
   - INNER: SOLDER.

STANDARD TOLERANCES	
.X	±0.2
.XX	±0.01
.XXX	±0.005

*STANDARD TOLERANCES APPLY ONLY TO DIMENSIONS IN INCHES

Fairview Microwave
an INFINITE brand

NOTES:
1. UNLESS OTHERWISE SPECIFIED ALL DIMENSIONS ARE NOMINAL.
2. ALL SPECIFICATIONS ARE SUBJECT TO CHANGE WITHOUT NOTICE AT ANY TIME.
3. DIMENSIONS ARE IN INCHES [mm].

TITLE
SMA Male Precision Connector Clamp/Solder Attachment for LL335i Cable .490 inch Diameter Body

DWG NO	CAGE CODE
FMCN1185	3FKR5

CAD FILE	SHEET	SCALE	SIZE	
05/30/19	1 OF 1	N/A	A	7361

301 Leora Ln., Suite 100, Lewisville, TX 75056 | Tel: 1-800-715-4396 / (972) 649-6678 / Fax: (972) 649-6689

Copyright © 2019

Fairview Microwave
an INFINITE brand

FMCN1182
DATA SHEET

N Male Precision Connector Clamp/Solder Attachment for LL335i Cable

Type N male precision connector with clamp/solder attachment for LL335i, part number FMCN1182, from Fairview Microwave is in-stock and ships same day. This type N male connector operates up to a maximum frequency of 18 GHz and offers excellent VSWR of 1.16:1.

Fairview's type N male connector FMCN1182 datasheet specifications and outline drawing are shown in this PDF below. Our extensive offering of RF, microwave and millimeter wave connectors allows designers to configure and customize their signal connections however they like. From providing an I/O for a board design to creating a custom cable assembly configuration, Fairview Microwave has a connector solution to meet your needs. Fairview Microwave also has the expertise to build your custom cable assemblies for you and ship them same-day.



Configuration:

- N Male Connector
- 50 Ohms
- Straight Body Geometry
- LL335i Interface Type
- Clamp/Solder Attachment
- 3/4 inch Hex
- Precision Design

Features:

- Operating Frequency of 18 GHz Max.
- Excellent VSWR of 1.16:1
- Gold over Nickel Plated Beryllium Copper Contact
- 50 µin minimum contact plating

Applications:

- General Purpose Test
- Precision Test & Measurement
- Custom Cable Assemblies

Electrical Specifications

Description	Min	Typ	Max	Units
Frequency Range	DC		18	GHz
VSWR			1.16:1	

Electrical Specification Notes:
Insertion loss: 0.04 x sqrt(fGHz) dB max.
RF leakage: 90 dB min up to 1 GHz.

Mechanical Specifications

Size

Length	1.74 in [44.2 mm]
Width/Dia.	0.75 in [19.05 mm]
Weight	0.104 lbs [47.17 g]
Mating Cycles	500 Cycles
Mating Torque	19 to 21 in-lbs [2.15 to 2.37 Nm]

Material Specifications

Description	Material	Plating
Contact	Beryllium Copper	Gold over Nickel 50 µin minimum
Insulation	PTFE	
Body	Passivated Stainless Steel	SAE-AMS-2700
Coupling Nut	Passivated Stainless Steel	SAE-AMS-2700

Environmental Specifications

Temperature

Operating Range	-65 to +165 deg C
Humidity	MIL-STD-202, Method 106, No Vibration

Fairview Microwave
301 Leora Ln., Suite 100
Lewisville, TX 75056
Tel: 1-800-715-4396 / (972) 649-6678
Fax: (972) 649-6689
www.fairviewmicrowave.com
sales@fairviewmicrowave.com

Copyright © 2020

Shock	MIL-STD-202, Method 213, Condition I
Vibration	MIL-STD-202, Method 204, Condition D
Thermal Shock	MIL-STD-202, Method 107, Condition B
Salt Spray	MIL-STD-202, Method 101, Condition B (5%)

Compliance Certifications (see product page for current document)

Plotted and Other Data

Notes:

Assembly Instruction

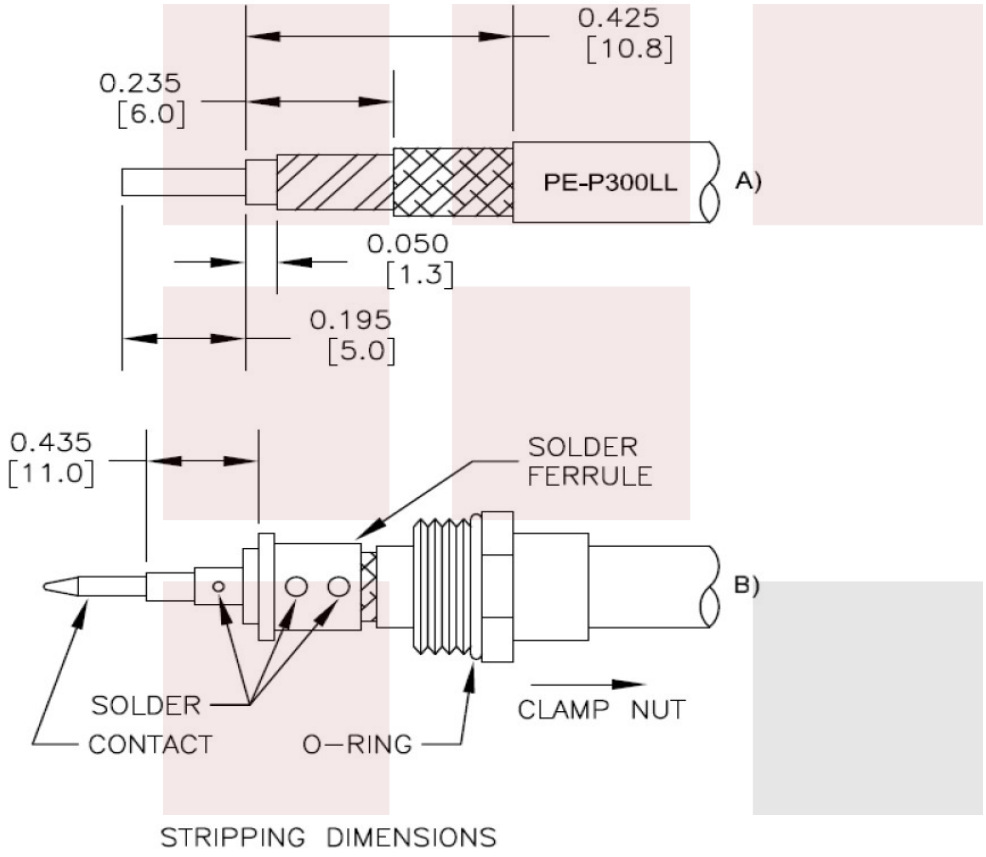

STRIPPING DIMENSIONS

ASSEMBLY PROCEDURES

1. STRIP CABLE AS SHOWN IN (A). DO NOT NICK DIELECTRIC.

2. SLIDE CLAMP NUT OVER CABLE AS SHOWN IN (B). INSERT CALBE INTO SOLDER FERRULE UNTIL CALBE IELECTRIC IS FLUSH WITH FACE OF FERRLUE. THEN SOLDER BOTH CABLE BRAIDS WHERE SHOWN.

3. SCREW ASSEMBLY INTO BODY & TIGHTEN CLAMP NUT TO 35-45 IN/LBS.

Copyright © 2020

N Male Precision Connector Clamp/Solder Attachment for LL335i Cable from Fairview Microwave is in-stock and available to ship same-day. All of our RF/microwave products are available off-the-shelf from our ISO 9001:2008 certified facilities in Lewisville, Texas. Fairview Microwave is RF on-demand.

For additional information on this product, please click the following link: N Male Precision Connector Clamp/Solder Attachment for LL335i Cable FMCN1182

URL: https://www.fairviewmicrowave.com/n-male-ll335i-connector-fmcn1182-p.aspx

The information contained in this document is accurate to the best of our knowledge and representative of the part described herein. It may be necessary to make modifications to the part and/or the documentation of the part, in order to implement improvements. Fairview Microwave reserves the right to make such changes as required. Unless otherwise stated, all specifications are nominal. Fairview Microwave does not make any representation or warranty regarding the suitability of the part described herein for any particular purpose, and Fairview Microwave does not assume any liability arising out of the use of any part or documentation.

REVISIONS			
REV.	DESCRIPTION	DATE	APPROVED
A	PCR FMCN1182	6/15/2020	S.ELLIS

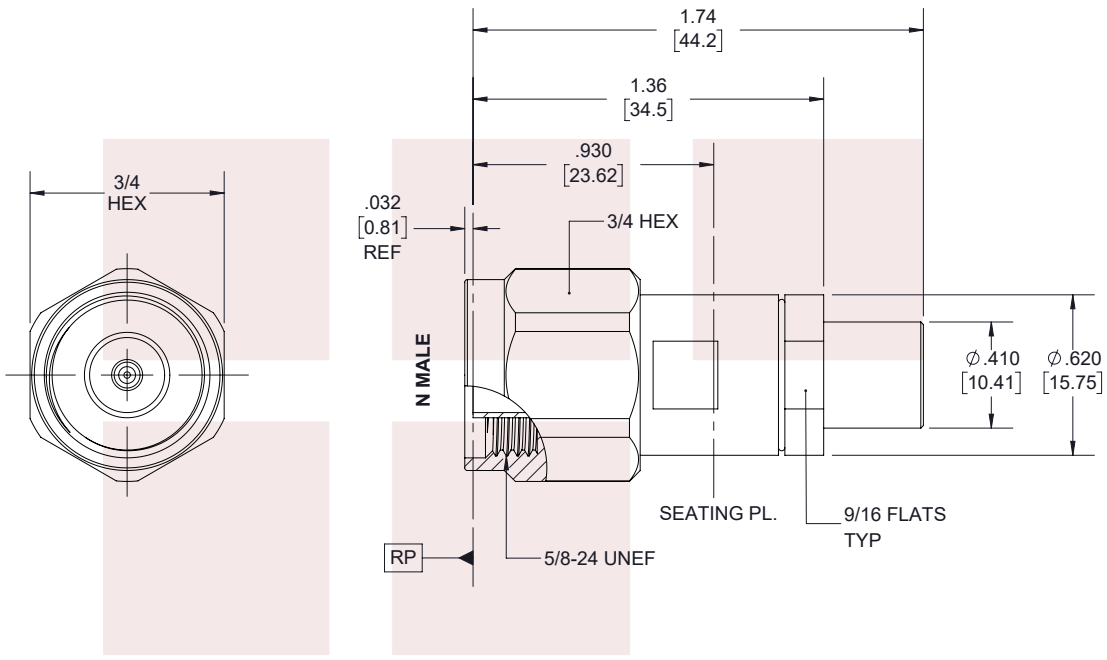

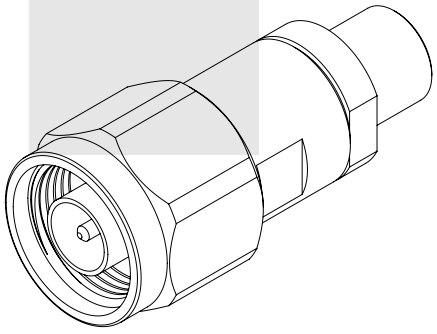

THESE COMMODITIES, TECHNOLOGY OR SOFTWARE WERE EXPORTED FROM THE UNITED STATES IN ACCORDANCE WITH THE EXPORT ADMINISTRATION REGULATIONS. DIVERSION CONTRARY TO U.S. LAW PROHIBITED.

Fairview Microwave™
an INFINITE brand

TITLE

N Male Precision Connector Clamp/Solder Attachment for LL335i Cable

UNLESS OTHERWISE SPECIFIED LEADING DIMENSIONS ARE INCHES
DIMENSIONS IN [ ] ARE MILLIMETERS

TOLERANCES:

.X = ±.2 [5.08]
.XX = ±.02 [.51]
.XXX = ±.005 [.13]
FRACTIONS ± 1/32
ANGLES ± 1°

CABLE LENGTH (L) TOLERANCES:

L ≤ 12 [305] = +1 [25] / -0
12 [305] < L ≤ 60 [1524] = +2 [51] / -0
60 [1524] < L ≤ 120 [3048] = +4 [102] / -0
120 [3048] < L ≤ 300 [7620] = +6 [152] / -0
300 [7620] < L = +5%L / -0

THIRD-ANGLE PROJECTION

THE INFORMATION AND DESIGN IN THIS DOCUMENT IS THE PROPERTY OF FAIRVIEW MICROWAVE CORPORATION. ALL RIGHTS RESERVED.

SHEET 1 OF 2

ALL DIMENSIONS SHOWN ARE FOR REFERENCE ONLY.

SCALE N/A

SIZE	CAGE CODE	DRAWN BY	ITEM NO.	REV
A	3FKR5	K.Dang	FMCN1182	A

T-Rev.D

301 Leora Ln., Suite 100, Lewisville, TX 75056 | Tel: 1-800-715-4396 / (972) 649-6678 / Fax: (972) 649-6689