NOTICE OF PROPRIETARY RIGHTS THIS DOCUMENT CONTAINS CONFIDENTIAL TECHNICAL DATA, INCLUDING TRADE SECRETS, PROPRIETARY TO TIMES MICROWAVE SYSTEMS. DISCLOSURE OF THIS DATA IS EXPRESSLY CONDITIONED UPON YOUR ASSENT THAT ITS USE IS LIMITED TO USE WITHIN YOUR COMPANY ONLY. ANY OTHER USE IS STRICTLY PROHIBITED WITHOUT THE PRIOR WRITTEN CONSENT OF TIMES MICROWAVE SYSTEMS.

SYM	REVISION DESCRIPTION	DFTM	DATE	APPD	DATE
A	RELEASED FOR PRODUCTION	K.A.M.	2/25/10	J.D.B.	3/11/10
B	CHANGED PER CDC #34322	D.J.H.	10/12/11	J.D.B.	10/27/11
C	CHANGED PER CDC #36607	D.J.H.	11/16/12	J.D.B.	11/19/12

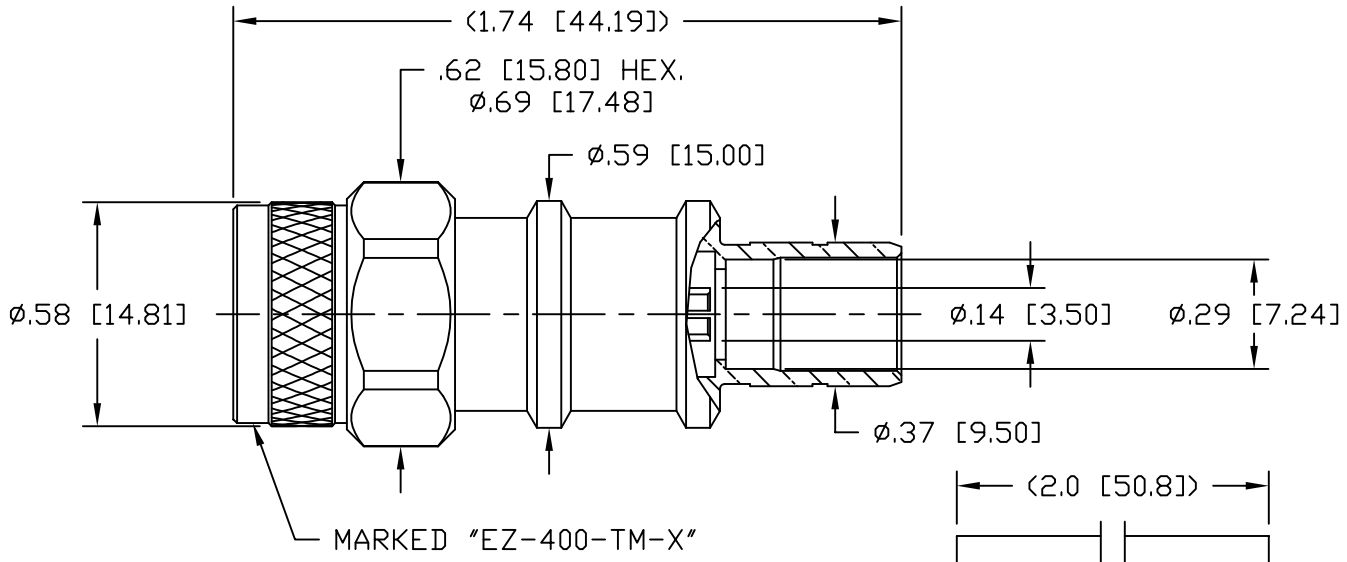

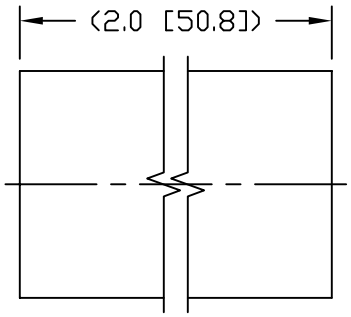

HEAT SHRINK TUBING

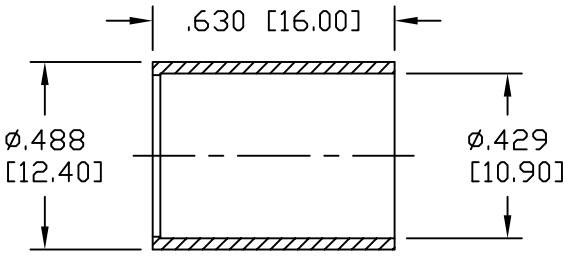

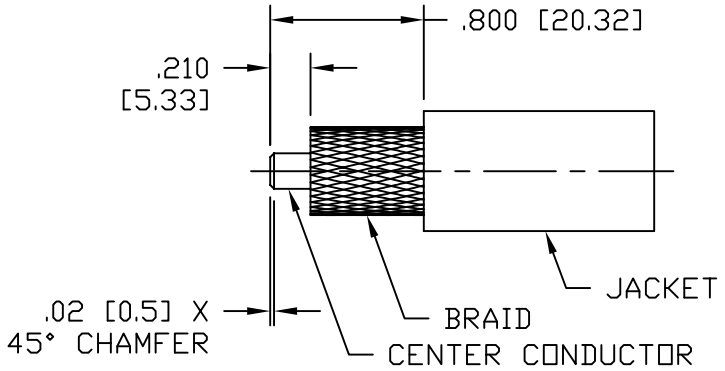

CABLE TRIMMING DIMENSIONS
USE CST-400 (3192-004)

NOTES:
1. MATERIALS AND FINISHES:
   BODY: BRASS, ALBALOY PLATING
   COUPLING NUT: BRASS, ALBALOY PLATING
   CENTER CONTACT: BERYLLIUM COPPER, GOLD PLATING
   FERRULE: COPPER, ALBALOY PLATING
2. ELECTRICAL:
   IMPEDANCE: 50 OHMS NOMINAL
   FREQUENCY: DC-6 GHz
   VSWR: 1.2 DC-6 GHz
   DIELECTRIC WITHSTANDING VOLTAGE: 1,000 VOLTS RMS
3. MECHANICAL:
   DURABILITY: 500 CYCLES MIN.
   TEMPERATURE RANGE: -65°C TO +165°C
4. CABLING INSTRUCTIONS:
A. SLIDE FERRULE OVER CABLE JACKET
B. TRIM CABLE TO DIMENSIONS SHOWN. MAKE SURE CUTS ARE SHARP AND SQUARE. DO NOT NICK BRAID OR CENTER CONDUCTOR.
C. FLAIR BRAID SLIGHTLY AND INSERT CABLE INTO BODY UNTIL BOTTOMED. SLIDE THE FERRULE UP THE CABLE AND OVER THE BRAID UNTIL BOTTOMED ON BODY. CRIMP FERRULE USING A .429 HEX.
5. RECOMMENDED COUPLING NUT TORQUE: 4-6 IN-LBS.

MATL:	UNLESS OTHERWISE SPECIFIED	DFTM. K. A. M.	TIMES MICROWAVE SYSTEMS
	ALL DIMENSIONS ARE IN INCHES MACHINED SURFACES FINISH 32 RMS MAX. REMOVE ALL BURRS .005 MAX. BREAK MACHINE CORNERS .005 MAX. FILLET R. TOLERANCES ON DECIMALS .XX ±.01 .XXX ±.005 ANGLES ± 1° FRACTIONS ± 1/64	DATE 2/25/10 CHKD. J. D. B. DATE 3/11/10 APPD. J. D. B.	**EZ-400-TM-X** PLUG, TNC, EZ FOR LMR-400
USED ON: B			
SCALE: ~ DWG. SIZE A	DO NOT SCALE DRAWING CODE IDENT 68999	DATE 3/11/10	SHT. 1 of 1 SD3190-2533 REV. C

Fairview Microwave
an INFINITE brand

TIMES MICROWAVE SYSTEMS

EZ-400-NMH-RA-X DATA SHEET

RA N Male Connector Crimp / Non-Solder Contact Attachment For LMR-400 Cable

Times Microwave Systems Connector Specification

RA type N male connector with crimp/non-solder contact attachment for LMR-400, part number EZ-400-NMH-RA-X, from Fairview Microwave is in-stock and ships same day. This type N male connector operates up to a maximum frequency of 6 GHz and offers good VSWR of 1.35:1. Its right angle body geometry facilitates connections in tight spaces.

Fairview's RA type N male connector EZ-400-NMH-RA-X datasheet specifications and outline drawing are shown in this PDF below. Our extensive offering of RF, microwave and millimeter wave connectors allows designers to configure and customize their signal connections however they like. From providing an I/O for a board design to creating a custom cable assembly configuration, Fairview Microwave has a connector solution to meet your needs. Fairview Microwave also has the expertise to build your custom cable assemblies for you and ship them same-day.

Electrical Specifications

Description	Min	Typ	Max	Units
Frequency Range	DC		6	GHz
VSWR			1.35:1	
DWV (AC)			2,500	Vrms

Performance by Frequency

Description	F1	F2	F3	F4	F5	Units
Freq. Range	DC to 3					GHz
Insertion Loss, Max	0.1					dB

Mechanical Specifications

Size

Length	1.87 in [47.5 mm]
Width/Dia.	0.81 in [20.57 mm]
Height	1.42 in [36.07 mm]
Weight	0.194 lbs [88 g]
Mating Torque	44 in-lbs [4.97 Nm]

Material Specifications

Description	Material	Plating
Contact	Beryllium Copper	Gold 1.27 µm minimum
Insulation	PTFE	
Body	Brass	Tri-Metal 2 µm minimum
Coupling Nut	Brass	Tri-Metal 2 µm minimum

Configuration:

- N Male Connector
- 50 Ohms
- Right Angle Body Geometry
- LMR-400 Interface Type
- Crimp/Non-Solder Contact Attachment

Features:

- Operating Frequency of 6 GHz Max.
- Good VSWR of 1.35:1
- Gold Plated Beryllium Copper Contact
- 1.27 µm minimum contact plating

Applications:

- General Purpose Test
- Custom Cable Assemblies

Fairview Microwave
301 Leora Ln., Suite 100
Lewisville, TX 75056
Tel: 1-800-715-4396 / (972) 649-6678
Fax: (972) 649-6689
www.fairviewmicrowave.com
sales@fairviewmicrowave.com

Copyright © 2020

Environmental Specifications

Temperature

Operating Range	-55 to +155 deg C
Shock	MIL-STD 202, Method 213, Condition I
Vibration	MIL-STD 202, Method 204, Condition B

Compliance Certifications (see product page for current document)

Plotted and Other Data

Notes:

RA N Male Connector Crimp/Non-Solder Contact Attachment For LMR-400 Cable from Fairview Microwave is in-stock and available to ship same-day. All of our RF/microwave products are available off-the-shelf from our ISO 9001:2008 certified facilities in Lewisville, Texas. Fairview Microwave is RF on-demand.

For additional information on this product, please click the following link: RA N Male Connector Crimp/Non-Solder Contact Attachment For LMR-400 Cable EZ-400-NMH-RA-X

URL: https://www.fairviewmicrowave.com/n-male-lmr-400-connector-ez-400-nmh-ra-x-p.aspx

The information contained in this document is accurate to the best of our knowledge and representative of the part described herein. It may be necessary to make modifications to the part and/or the documentation of the part, in order to implement improvements. Fairview Microwave reserves the right to make such changes as required. Unless otherwise stated, all specifications are nominal. Fairview Microwave does not make any representation or warranty regarding the suitability of the part described herein for any particular purpose, and Fairview Microwave does not assume any liability arising out of the use of any part or documentation.

REVISIONS			
REV.	DESCRIPTION	DATE	APPROVED
A	INITIAL RELEASE	01/19/2021	SELLIS

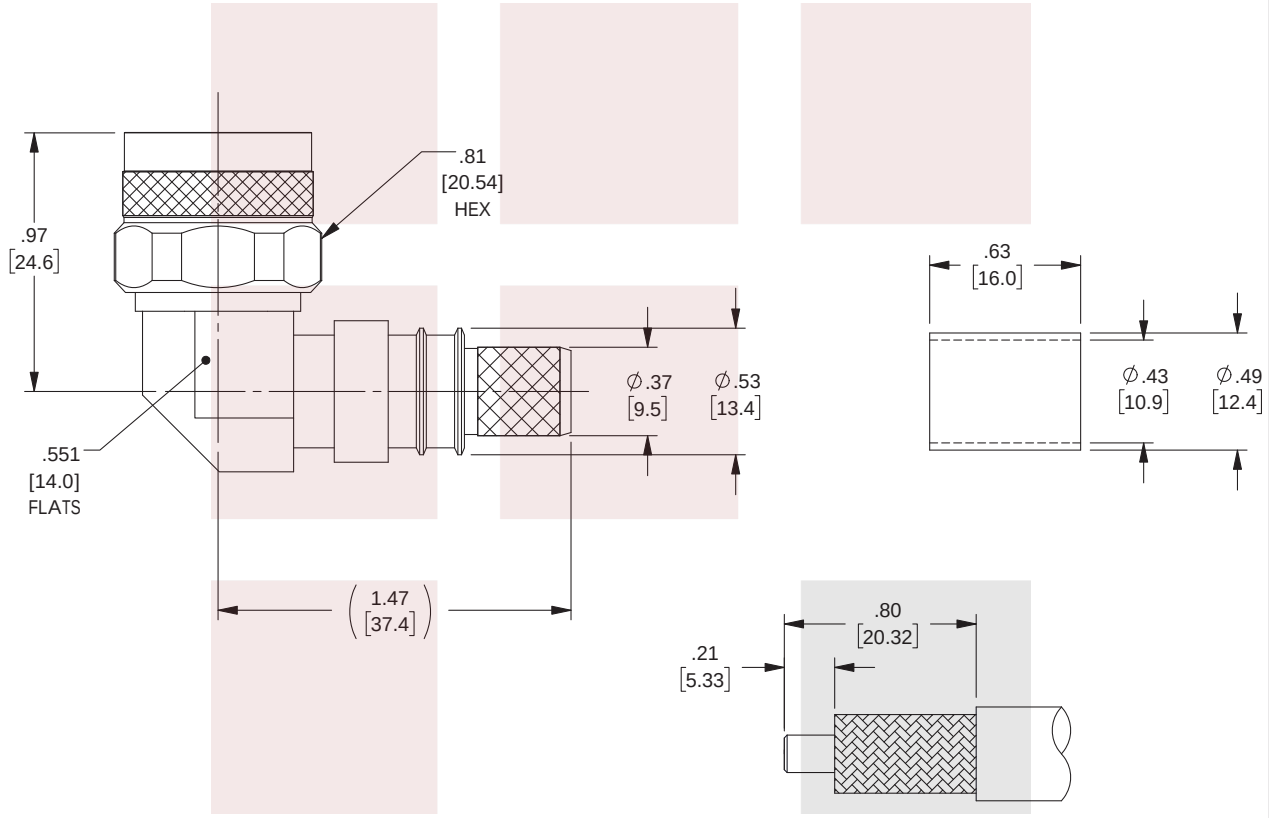

RECOMMENDED CABLE STRIPPING DIMENSIONS

FERRULE HEX CRIMP SIZE: 0.429 [10.89]

THESE COMMODITIES, TECHNOLOGY OR SOFTWARE WERE EXPORTED FROM THE UNITED STATES IN ACCORDANCE WITH THE EXPORT ADMINISTRATION REGULATIONS. DIVERSION CONTRARY TO U.S. LAW PROHIBITED.

Fairview Microwave
an INFINITE brand

TITLE

RA N Male Connector Crimp/Non-Solder Contact Attachment For LMR-400 Cable

UNLESS OTHERWISE SPECIFIED LEADING DIMENSIONS ARE INCHES
DIMENSIONS IN [ ] ARE MILLIMETERS

TOLERANCES:

.X = ± .2 [5.08]
.XX = ± .02 [.51]
.XXX = ± .005 [.13]
FRACTIONS ± 1/32
ANGLES ± 1°

CABLE LENGTH (L) TOLERANCES:

L ≤ 12 [305] = +1 [25] / -0
12 [305] < L ≤ 60 [1524] = +2 [51] / -0
60 [1524] < L ≤ 120 [3048] = +4 [102] / -0
120 [3048] < L ≤ 300 [7620] = +6 [152] / -0
300 [7620] < L = +5%L / -0

THIRD-ANGLE PROJECTION

THE INFORMATION AND DESIGN IN THIS DOCUMENT IS THE PROPERTY OF FAIRVIEW MICROWAVE CORPORATION. ALL RIGHTS RESERVED.

SHEET 1 OF 1

ALL DIMENSIONS SHOWN ARE FOR REFERENCE ONLY.

SCALE N/A

SIZE	CAGE CODE	DRAWN BY	ITEM NO.	REV
A	3FKR5	BPUCHASKI	EZ-400-NMH-RA-X	A

T-Rev.D

Times Microwave LMR-400-FR Low Loss Flexible Coax Cable Black FRPE Jacket Fire Rated

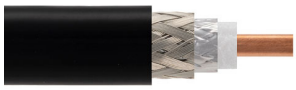

LMR-400-FR

TIMES MICROWAVE SYSTEMS

Times Microwave Systems Connector Specification

Configuration

- Low Loss, Outdoor Flexible Cable
- 2 Shield(s)

Features

- Max Operating Frequency of 8 GHz
- Phase Velocity 84% VoP
- Low Smoke, Zero Halogen FRPE Jacket
- CMR Riser Rated Coax
- Max Operating Temperature +85°C
- Min Install Bend Radius of 1 inches

Applications

- RF Test Systems
- In-Building Riser Runs
- Laboratory Applications
- Antenna Installs
- General Purpose RF Interconnect

Description

LMR-400-FR Fire Rated version of the 400 series Low Loss Coax from Times Microwave is part of the large product offering by Fairview Microwave of radio frequency coaxial cable types specifically stocked to be ready for same-day shipment. Fairview Microwave LMR-400-FR coax cable is manufactured in a flexible design and has a 50 Ohm impedance. This low loss and CMR riser rated 50 Ohm coax cable LMR-400-FR is constructed with a 0.405 inch diameter and Black FRPE jacket.

LMR-400-FR flexible 50 Ohm coax cable with FRPE jacket is rated for a 8 GHz maximum operating frequency. This 50 Ohm 0.405 inch diameter and low loss fire rated coax cable is built with an aluminum double shield count and RF shielding of 90 dB. Times Microwave LMR-400-FR FRPE coax is constructed with Foam PE dielectric and a maximum operating temperature of 85 degrees C. Fairview Microwave's offering of LMR-400-FR coax cable provides specs for this wire on its RF coax cable LMR-400-FR datasheet.

LMR-400-FR cable is part of more than one million RF, microwave parts in stock at Fairview Microwave. This Times Microwave low loss flexible LMR-400-FR coax cable is ready to buy and can be shipped worldwide. Fairview Microwave also maintains a wide selection of other radio frequency coaxial cable types that ship same-day from our warehouse as with the rest of our other RF/microwave components.

* LMR™ is a trademark of Times Microwave Systems.

Electrical Specifications

Description	Minimum	Typical	Maximum	Units
Frequency Range	DC		8	GHz
Impedance		50		Ohms
Velocity of Propagation		84		%
Time Delay		1.2 [3.94]		ns/ft [ns/m]
Shielding Effectiveness	90			dB
Dielectric Withstanding Voltage (DC)			2,500	Vdc
Jacket Spark			8,000	Vrms
Inner Conductor DC Resistance			1.39	Ohms/1000ft

© 2023 Infinite Electronics, Inc. Fairview Microwave is a registered trademark of Infinite Electronics, Inc.
+1 (866) 839-4711 | sales@fairviewmicrowave.com | fairviewmicrowave.com

Times Microwave LMR-400-FR Low Loss Flexible Coax Cable Black FRPE Jacket Fire Rated

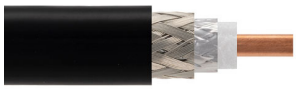

LMR-400-FR

Electrical Specifications

Description	Minimum	Typical	Maximum	Units
Outer Conductor DC Resistance			1.65	Ohms/1000ft
Nominal Capacitance		23.9 [78.41]		pF/ft [pF/m]
Nominal Inductance		0.06 [0.2]		uH/ft [uH/m]
Input Power (Peak)			16	kWatts

Performance by Frequency Band

Description	F1	F2	F3	F4	F5	Units
Frequency	50	150	220	450	900	MHz
Attenuation, Typ	0.9	1.5	1.9	2.7	3.9	dB/100ft
	2.95	4.92	6.23	8.86	12.8	dB/100m
Input Power (CW), Max	2,570	1,470	1,200	830	580	Watts

Description	F6	F7	F8	F9	F10	Units
Frequency	1.5	1.8	2	2.5	5.8	GHz
Attenuation, Typ	5.1	5.7	6	6.8	10.8	dB/100ft
	16.73	18.7	19.69	22.31	35.43	dB/100m
Input Power (CW), Max	440	400	370	330	210	Watts

Mechanical Specifications

Diameter	0.405 in [10.29 mm}
Weight	0.081 lbs/ft [0.12 kg/m]
Min. Bend Radius (Installation)	1 in [25.4 mm]
Min. Bend Radius (Repeated)	4 in [101.6 mm]
Bending Moment	0.5 lbs-ft [0.68 N-m]
Tensile Strength	160 lbs [72.57 kg]
Flat Plate Crush	40 lbs/in [0.71 kg/mm]

Construction Specifications

Description	Material and Plating	Diameter
Inner Conductor	Copper, 1 Strand	0.108 in [2.74 mm]
Conductor Type	Solid	
Dielectric	Foam PE	0.285 in [7.24 mm]
First Shield	Aluminum Tape	
Second Shield	Tinned Copper	
Jacket	FRPE, Black	0.405 in [10.29 mm]

© 2023 Infinite Electronics, Inc. Fairview Microwave is a registered trademark of Infinite Electronics, Inc.
+1 (866) 839-4711 | sales@fairviewmicrowave.com | fairviewmicrowave.com

Times Microwave LMR-400-FR Low Loss Flexible Coax Cable Black FRPE Jacket Fire Rated

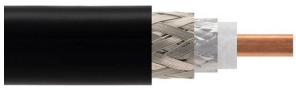

LMR-400-FR

Environmental Specifications

Temperature

Operating Range	-40 to 85 deg C
Installation Range	-40 to 85 deg C
Storage Range	-70 to 85 deg C

Compliance Certifications (see product page for current document)

Plotted and Other Data

Notes:

Times Microwave LMR-400-FR Low Loss Flexible Coax Cable Black FRPE Jacket Fire Rated from Fairview Microwave is in-stock and available to ship same-day. All of our RF/microwave products are available off-the-shelf from our ISO 9001:2008 certified facilities in Lewisville, Texas. Fairview Microwave is RF on-demand.

For additional information on this product, please click the following link: Times Microwave LMR-400-FR Low Loss Flexible Coax Cable Black FRPE Jacket Fire Rated LMR-400-FR

URL: https://www.fairviewmicrowave.com/lmr-400-fr-low-loss-flexible-coax-cable-frpe-jacket-lmr-400-fr-p.aspx

The information contained within this document is accurate to the best of our knowledge and representative of the part described herein. It may be necessary to make modifications to the part and/or the documentation of the part in order to impliment improvements. Fairview Microwave reserves the right to make such changes as required. Unless otherwise stated, all specifications are nominal. Fairview Microwave does not make any representation or warranty regarding the suitability of the part described herein for any particular purpose, and Fairview Microwave does not assume liability arising out of the use of any part or document.

© 2023 Infinite Electronics, Inc. Fairview Microwave is a registered trademark of Infinite Electronics, Inc.

LMR-400-FR CAD Drawing

Times Microwave LMR-400-FR Low Loss Flexible Coax Cable Black FRPE Jacket Fire Rated

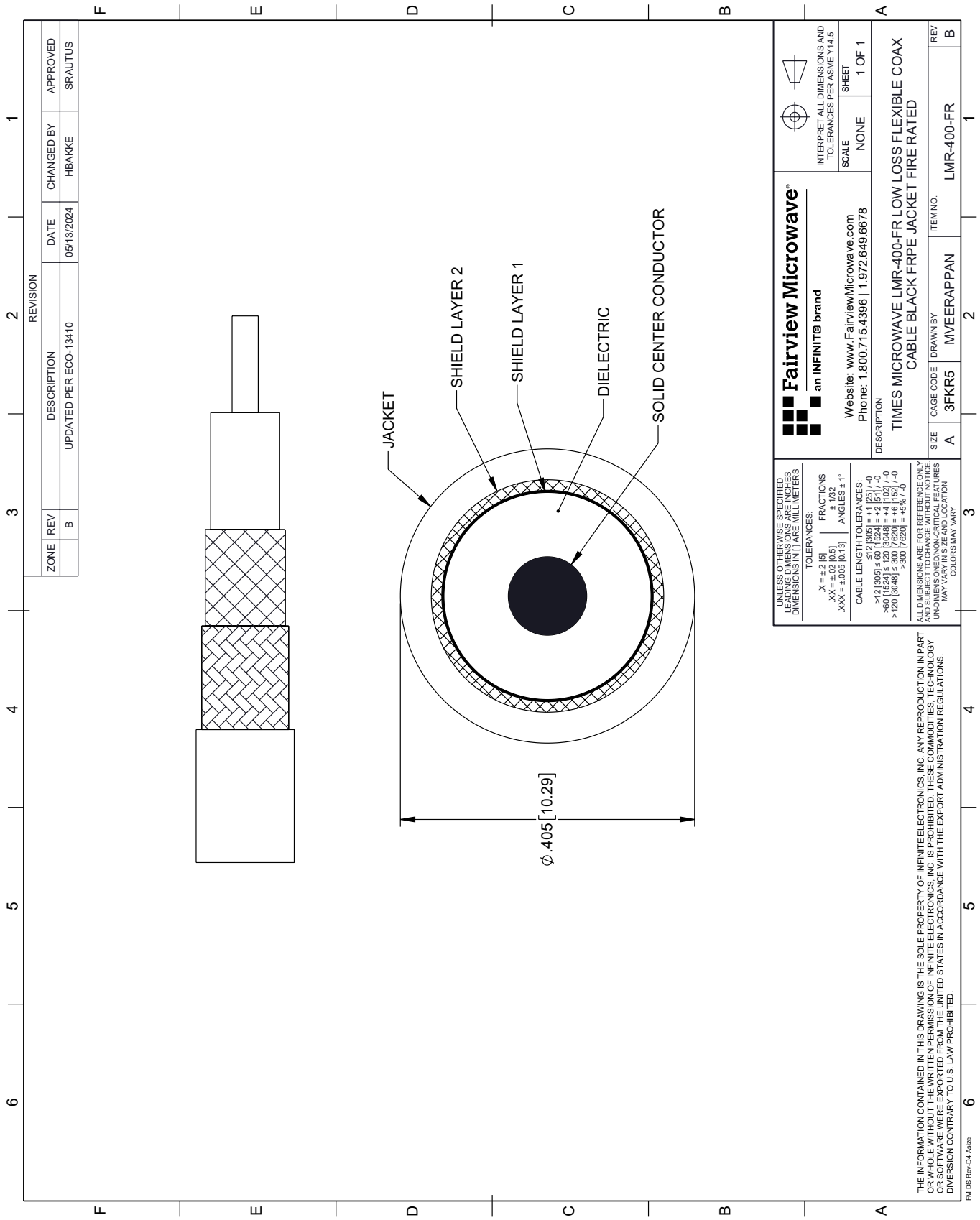

© 2023 Infinite Electronics, Inc. Fairview Microwave is a registered trademark of Infinite Electronics, Inc.