Fairview Microwave
RF COMPONENTS ON DEMAND. Done!

FMCN1373
DATA SHEET

C Male Connector Crimp/Solder Attachment For RG214, RG9, RG225, RG393 Cable

Type C male connector with crimp/solder attachment for RG214, RG9, RG225 and RG393, part number FMCN1373, from Fairview Microwave is in-stock and ships same day.

Fairview's type C male connector FMCN1373 datasheet specifications and outline drawing are shown in this PDF below. Our extensive offering of RF, microwave and millimeter wave connectors allows designers to configure and customize their signal connections however they like. From providing an I/O for a board design to creating a custom cable assembly configuration, Fairview Microwave has a connector solution to meet your needs. Fairview Microwave also has the expertise to build your custom cable assemblies for you and ship them same-day.

Mechanical Specifications

Size

Length	1.5 in [38.1 mm]
Width/Dia.	0.75 in [19.05 mm]
Weight	0.066 lbs [29.94 g]

Material Specifications

Description	Material	Plating
Contact		Silver QQ-S-365
Insulation	PTFE	
Body	Brass	Nickel QQ-N-290
Coupling Nut	Brass	Nickel QQ-N-290

Environmental Specifications

Compliance Certifications (see product page for current document)

Plotted and Other Data

Notes:

Configuration:

- C Male Connector
- MIL-STD-348
- 50 Ohms
- Straight Body Geometry
- RG214, RG9, RG225, RG393 Interface Type
- Crimp/Solder Attachment

Features:

- Silver Plated Contact
- Contact plating according to QQ-S-365

Applications:

- General Purpose Test
- Custom Cable Assemblies

Fairview Microwave
301 Leora Ln., Suite 100
Lewisville, TX 75056
Tel: 1-800-715-4396 / (972) 649-6678
Fax: (972) 649-6689
www.fairviewmicrowave.com
sales@fairviewmicrowave.com

Copyright © 2018

Assembly Instruction

*

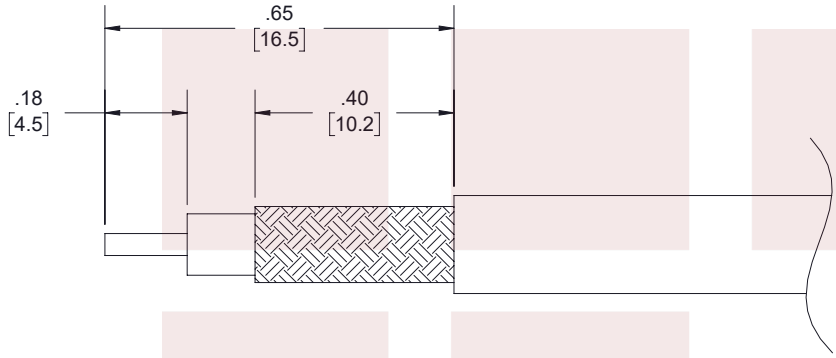

ASSEMBLY PROCEDURES

1. STRIP CABLE TO THE DIMENSIONS SHOWN, DO NOT NICK CENTER CONDUCTOR OR BRAID.
2. PUSH CENTER CONDUCTOR FULLY INTO CONTACT AND SOLDER, REMOVE ANY EXCESS SOLDER.
3. FLARE BRAID AND INSERT CONTACT INTO THE BODY UNTIL IT SEATS.
4. SLIDE FERRULE OVER BRAID AND CRIMP WITH CRIMP TOOL.

CRIMP SIZE REQUIRED

- CONTACT: SOLDER.
- FERRULE: .429 HEX CRIMP TOOL.

C Male Connector Crimp/Solder Attachment For RG214, RG9, RG225, RG393 Cable from Fairview Microwave is in-stock and available to ship same-day. All of our RF/microwave products are available off-the-shelf from our ISO 9001:2008 certified facilities in Allen, Texas. Fairview Microwave is RF on-demand.

For additional information on this product, please click the following link: C Male Connector Crimp/Solder Attachment For RG214, RG9, RG225, RG393 Cable FMCN1373

URL: https://www.fairviewmicrowave.com/c-male-rg214-rg9-rg225-rg393-connector-fmcn1373-p.aspx

The information contained in this document is accurate to the best of our knowledge and representative of the part described herein. It may be necessary to make modifications to the part and/or the documentation of the part, in order to implement improvements. Fairview Microwave reserves the right to make such changes as required. Unless otherwise stated, all specifications are nominal. Fairview Microwave does not make any representation or warranty regarding the suitability of the part described herein for any particular purpose, and Fairview Microwave does not assume any liability arising out of the use of any part or documentation.

301 Leora Ln., Suite 100, Lewisville, TX 75056 | Tel: 1-800-715-4396 / (972) 649-6678 / Fax: (972) 649-6689

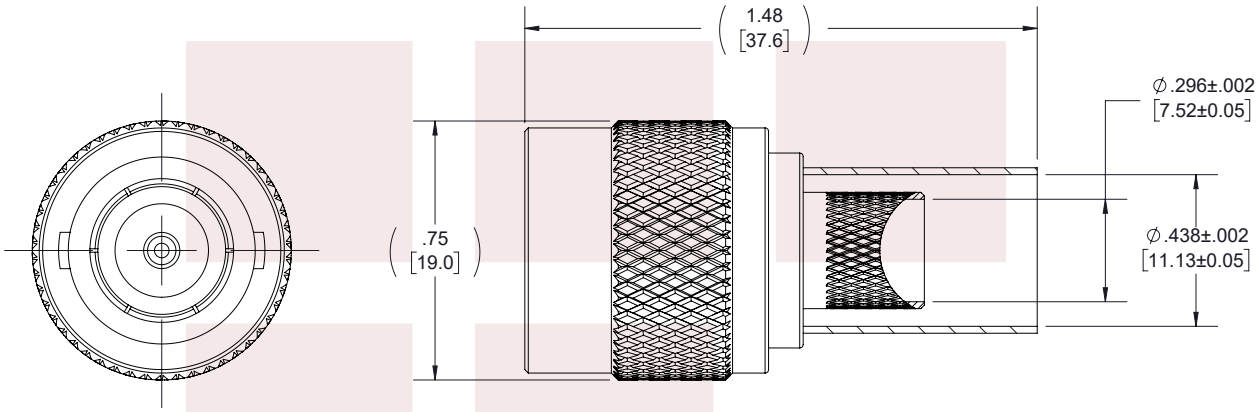

C MALE

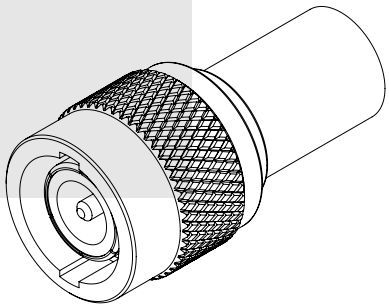

STANDARD TOLERANCES
.X ±0.2
.XX ±0.01
.XXX ±0.005

*STANDARD TOLERANCES APPLY ONLY TO DIMENSIONS IN INCHES

FAIRVIEW MICROWAVE INC. ALLEN, TX 75013 WWW.FAIRVIEWMICROWAVE.COM	NOTES: 1. UNLESS OTHERWISE SPECIFIED ALL DIMENSIONS ARE NOMINAL. 2. ALL SPECIFICATIONS ARE SUBJECT TO CHANGE WITHOUT NOTICE AT ANY TIME. 3. DIMENSIONS ARE IN INCHES [mm].
TITLE C Male Connector Crimp/Solder Attachment For RG214, RG9, RG225, RG393 Cable	DWG NO FMCN1373 / CAGE CODE 3FKR5
	CAD FILE 110917 / SHEET 1 OF 1 / SCALE N/A / SIZE A / 7361

301 Leora Ln., Suite 100, Lewisville, TX 75056 | Tel: 1-800-715-4396 / (972) 649-6678 / Fax: (972) 649-6689

Copyright © 2018

Fairview Microwave
RF COMPONENTS ON DEMAND. Done!

SC9104
DATA SHEET

N Male Connector Crimp/Solder Attachment For RG214, RG9, RG225, RG393 Cable

Type N male connector with crimp/solder attachment for RG214, RG9, RG225 and RG393, part number SC9104, from Fairview Microwave is in-stock and ships same day. This type N male connector operates up to a maximum frequency of 11 GHz and offers good VSWR of 1.5:1.

Fairview's type N male connector SC9104 datasheet specifications and outline drawing are shown in this PDF below. Our extensive offering of RF, microwave and millimeter wave connectors allows designers to configure and customize their signal connections however they like. From providing an I/O for a board design to creating a custom cable assembly configuration, Fairview Microwave has a connector solution to meet your needs. Fairview Microwave also has the expertise to build your custom cable assemblies for you and ship them same-day.

Electrical Specifications

Description	Min	Typ	Max	Units
Frequency Range	DC		11	GHz
VSWR			1.5:1	
Operating Voltage (AC)			1,000	Vrms

Mechanical Specifications

Size

Length	1.217 in [30.91 mm]
Width/Dia.	0.79 in [20.07 mm]
Weight	0.0395 lbs [17.92 g]

Material Specifications

Description	Material	Plating
Contact	Brass	Gold 30 µin minimum
Insulation	PTFE	
Body	Brass	Nickel 100 µin minimum
Coupling Nut	Brass	Nickel 100 µin minimum

Environmental Specifications

Temperature

Operating Range -65 to +165 deg C

Compliance Certifications (see product page for current document)

Plotted and Other Data

Notes:

Configuration:

- N Male Connector
- MIL-STD-348A
- 50 Ohms
- Straight Body Geometry
- RG214, RG9, RG225, RG393 Interface Type
- Crimp/Solder Attachment

Features:

- Operating Frequency of 11 GHz Max.
- Good VSWR of 1.5:1
- Gold Plated Brass Contact
- 30 µin minimum contact plating

Applications:

- General Purpose Test
- Custom Cable Assemblies

Fairview Microwave
1130 Junction Dr. #100
Allen, TX 75013
Tel: 1-800-715-4396 / (972) 649-6678
Fax: (972) 649-6689
www.fairviewmicrowave.com
sales@fairviewmicrowave.com

Copyright © 2017

Assembly Instruction

N Male Connector Crimp/Solder Attachment For RG214, RG9, RG225, RG393 Cable from Fairview Microwave is in-stock and available to ship same-day. All of our RF/microwave products are available off-the-shelf from our ISO 9001:2008 certified facilities in Allen, Texas. Fairview Microwave is RF on-demand.

For additional information on this product, please click the following link: N Male Connector Crimp/Solder Attachment For RG214, RG9, RG225, RG393 Cable SC9104

URL: https://www.fairviewmicrowave.com/n-male-standard-rg214-rg9-rg225-rg393-connector-sc9104-p.aspx

The information contained in this document is accurate to the best of our knowledge and representative of the part described herein. It may be necessary to make modifications to the part and/or the documentation of the part, in order to implement improvements. Fairview Microwave reserves the right to make such changes as required. Unless otherwise stated, all specifications are nominal. Fairview Microwave does not make any representation or warranty regarding the suitability of the part described herein for any particular purpose, and Fairview Microwave does not assume any liability arising out of the use of any part or documentation.

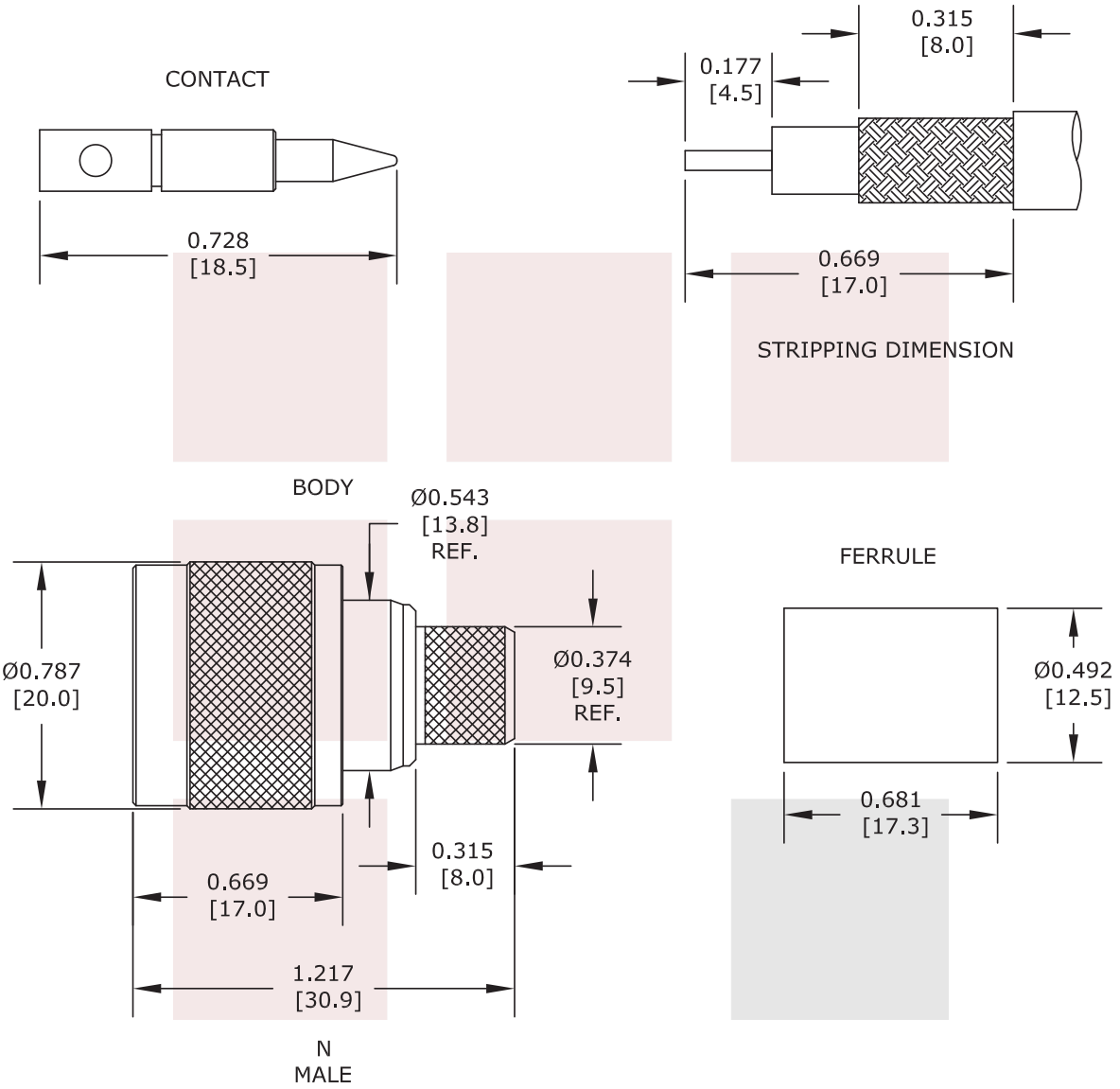

STANDARD TOLERANCES
.X ±0.2
.XX ±0.1
.XXX ±0.05

*STANDARD TOLERANCES APPLY ONLY TO DIMENSIONS IN INCHES

FAIRVIEW MICROWAVE INC. ALLEN, TX 75013 WWW.FAIRVIEWMICROWAVE.COM	NOTES: 1. UNLESS OTHERWISE SPECIFIED ALL DIMENSIONS ARE NOMINAL. 2. ALL SPECIFICATIONS ARE SUBJECT TO CHANGE WITHOUT NOTICE AT ANY TIME. 3. DIMENSIONS ARE IN INCHES [mm].				
TITLE N Male Connector Crimp/Solder Attachment For RG214, RG9, RG225, RG393 Cable	DWG NO SC9104		CAGE CODE 3FKR5		
	CAD FILE 121616	SHEET	SCALE N/A	SIZE A	41742

1130 Junction Dr. #100 Allen, TX 75013 | Tel: 1-800-715-4396 / (972) 649-6678 / Fax: (972) 649-6689

Copyright © 2017

Fairview Microwave
an INFINITE brand

RG214 DATA SHEET

RG214 Flexible Coax Cable Black PVC Jacket

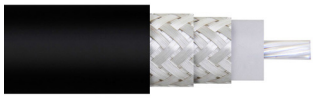

Electrical Specifications

Description	Min	Typ	Max	Units
Frequency Range	DC		11	GHz
Impedance		50		Ohms
Velocity of Propagation		66		%
Operating Voltage (AC)			5,000	Vrms
Nominal Capacitance		30.94 [101.51]		pF/ft [pF/m]

Performance by Frequency Band

Description	F1	F2	F3	F4	F5	Units
Frequency	0.01	0.1	1	5	10	GHz
Attenuation, Typ	0.637 2.09	2.073 6.8	7.686 25.22	20.689 67.88	36.52 119.82	dB/100ft dB/100m

Configuration:

- Flexible Cable
- 2 Shield(s)

Mechanical Specifications

Diameter	0.425 in 10.8 mm
Weight	0.1225 lbs/ft [0.18 Kg/m]
Min. Bend Radius (Installation)	2.165 in [54.99 mm]
Min. Bend Radius (Repeated)	3.228 in [81.99 mm]

Construction Specifications

Description	Material and Plating	Diameter
Inner Conductor	Copper, Silver, 7 Strands	0.089 in [2.26 mm]
Conductor Type	Solid	
Dielectric	PE	0.285 in [7.24 mm]
First Shield	Silver Plated Copper Braid	[ ]
Second Shield	Silver Plated Copper Braid	0.331 in [8.41 mm]
Jacket	PVC, Black	0.425 in [10.8 mm]

Environmental Specifications

Temperature

Operating Range -25 to +70 deg C

Compliance Certifications (see product page for current document)

Plotted and Other Data

Notes:

Fairview Microwave
301 Leora Ln., Suite 100
Lewisville, TX 75056
Tel: 1-800-715-4396 / (972) 649-6678
Fax: (972) 649-6689
www.fairviewmicrowave.com
sales@fairviewmicrowave.com

Copyright © 2020

RG214 Flexible Coax Cable Black PVC Jacket from Fairview Microwave has same day shipment for domestic and International orders. Our RF, microwave and fiber optic products maintain a 99% availability and are part of the broadest selection in the industry.

Click the following link to obtain additional part information: RG214 Flexible Coax Cable Black PVC Jacket RG214

URL: https://www.fairviewmicrowave.com/rg214-flexible-coax-cable-pvc-jacket-rg214-p.aspx

The information contained in this document is accurate to the best of our knowledge and representative of the part described herein. It may be necessary to make modifications to the part and/or the documentation of the part, in order to implement improvements. Fairview Microwave reserves the right to make such changes as required. Unless otherwise stated, all specifications are nominal. Fairview Microwave does not make any representation or warranty regarding the suitability of the part described herein for any particular purpose, and Fairview Microwave does not assume any liability arising out of the use of any part or documentation.

REVISIONS			
REV.	DESCRIPTION	DATE	APPROVED
A	INITIAL RELEASE	9/13/2021	A. GANWANI

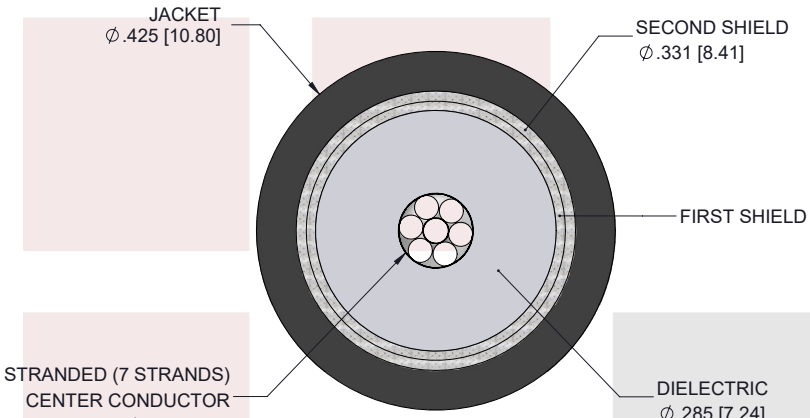

SECTION VIEW

THESE COMMODITIES, TECHNOLOGY OR SOFTWARE WERE EXPORTED FROM THE UNITED STATES IN ACCORDANCE WITH THE EXPORT ADMINISTRATION REGULATIONS. DIVERSION CONTRARY TO U.S. LAW PROHIBITED.

Fairview Microwave™
an INFINITE brand

TITLE

RG214 Flexible Coax Cable Black PVC Jacket

UNLESS OTHERWISE SPECIFIED LEADING DIMENSIONS ARE INCHES
DIMENSIONS IN [ ] ARE MILLIMETERS

TOLERANCES:

.X = ± .2 [5.08]
.XX = ± .02 [.51]
.XXX = ± .005 [.13]
FRACTIONS ± 1/32
ANGLES ± 1°

CABLE LENGTH (L) TOLERANCES:

L ≤ 12 [305] = +1 [25] / -0
12 [305] < L ≤ 60 [1524] = +2 [51] / -0
60 [1524] < L ≤ 120 [3048] = +4 [102] / -0
120 [3048] < L ≤ 300 [7620] = +6 [152] / -0
300 [7620] < L = +5%L / -0

THIRD-ANGLE PROJECTION

THE INFORMATION AND DESIGN IN THIS DOCUMENT IS THE PROPERTY OF FAIRVIEW MICROWAVE CORPORATION. ALL RIGHTS RESERVED.

SHEET 1 OF 2

ALL DIMENSIONS SHOWN ARE FOR REFERENCE ONLY.

SCALE N/A

SIZE	CAGE CODE	DRAWN BY	ITEM NO.	REV
A	3FKR5	K.Dang	RG214	A

T-Rev.D