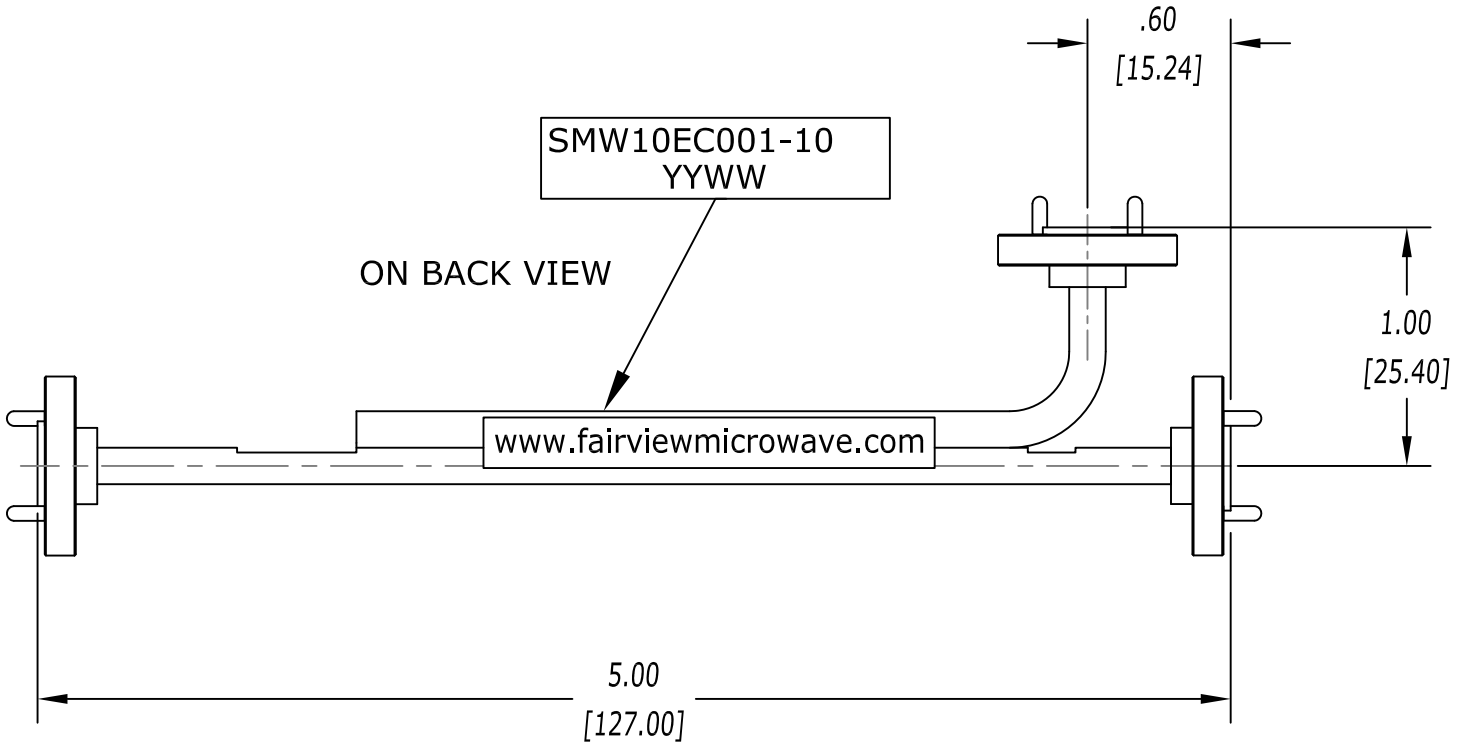

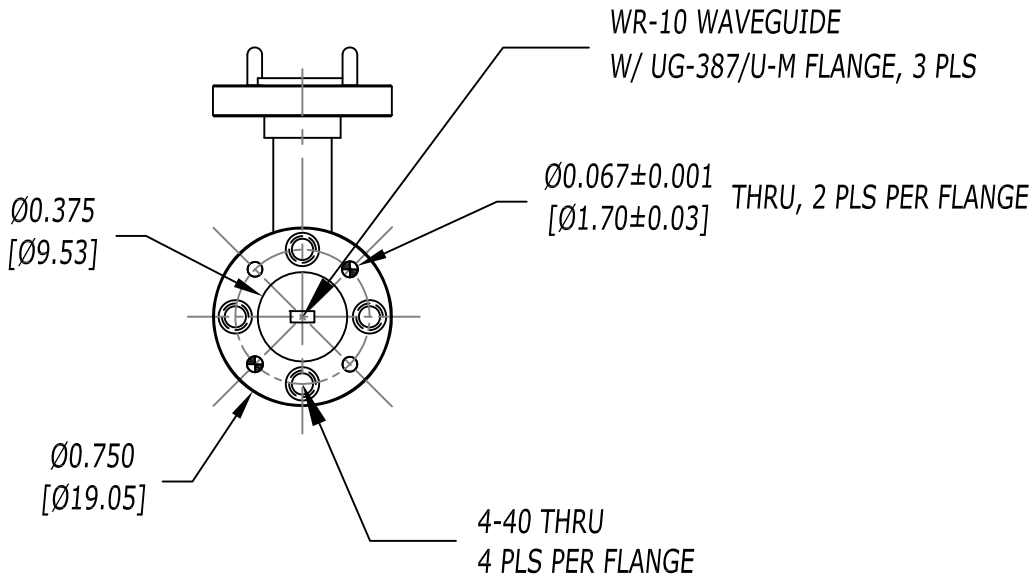

UNLESS OTHERWISE SPECIFIED:
DIMENSIONS ARE IN: inches [mm]
TOLERANCES ARE:
.XX ± .02 [±.51]
.XX ±.005 [±.13]

* THESE DIMENSIONS AND TOLERANCES SUPERSEDE NOTE #1 ON TITLE BLOCK.

FAIRVIEW MICROWAVE INC. ALLEN, TX 75013 WWW.FAIRVIEWMICROWAVE.COM	NOTES: 1. UNLESS OTHERWISE SPECIFIED ALL DIMENSIONS ARE NOMINAL. 2. ALL SPECIFICATIONS ARE SUBJECT TO CHANGE WITHOUT NOTICE AT ANY TIME. 3. DIMENSIONS ARE IN INCHES [mm].
TITLE	DWG NO SMW10EC001-10 / CAGE CODE 3FKR5
	CAD FILE 041715 / SHEET / SCALE N/A / SIZE A / 2233