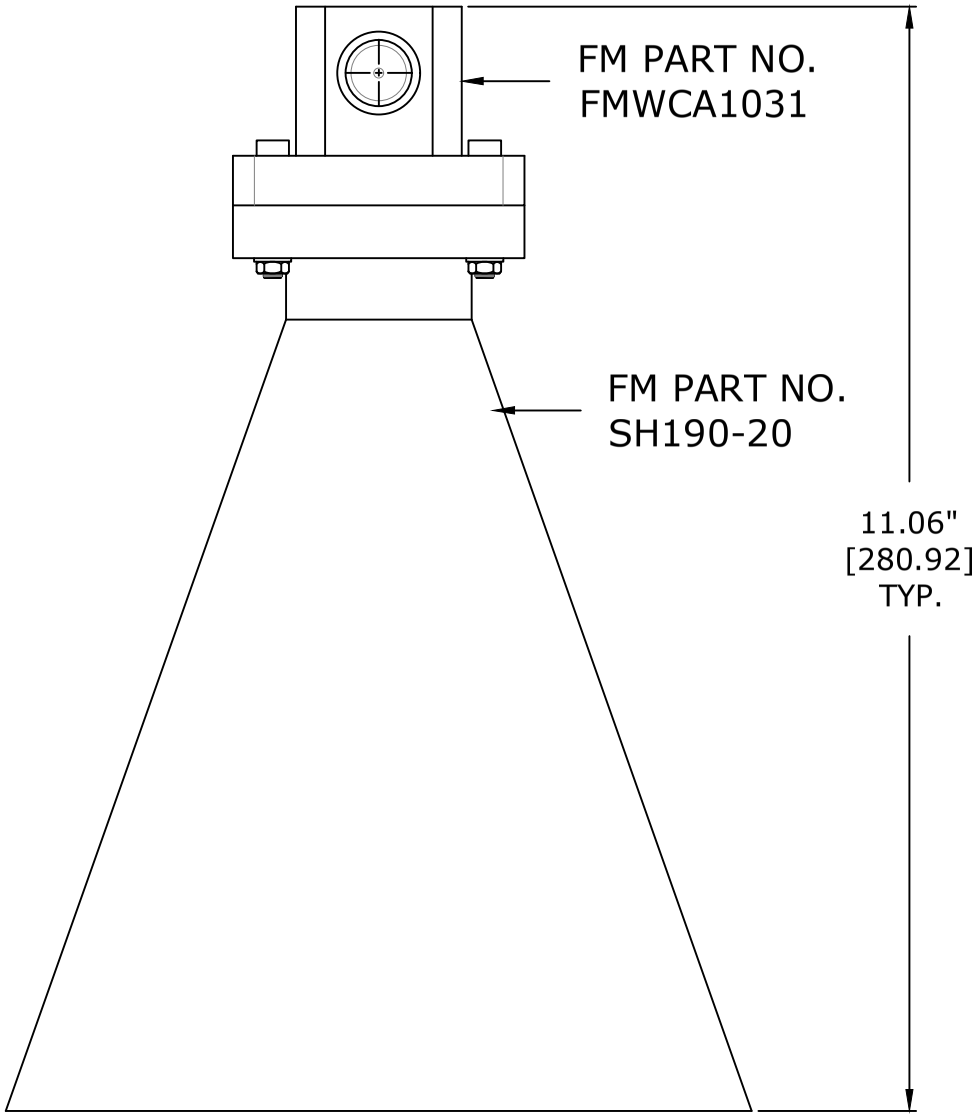


| | | | | | |
|---|---|---|---|---|---|
| FAIRVIEW MICROWAVE INC.<br>WWW.FAIRVIEWMICROWAVE.COM | NOTES:<br>1. UNLESS OTHERWISE SPECIFIED ALL DIMENSIONS ARE NOMINAL.<br>2. ALL SPECIFICATIONS ARE SUBJECT TO CHANGE WITHOUT NOTICE AT ANY TIME.<br>3. DIMENSIONS ARE IN INCHES [mm]. | | | | |
| TITLE | DWG NO<br>SMH190NR-20 | | CAGE CODE<br>3FKR5 | | |
| | CAD FILE 040416 | SHEET | SCALE N/A | SIZE A | 5568 |