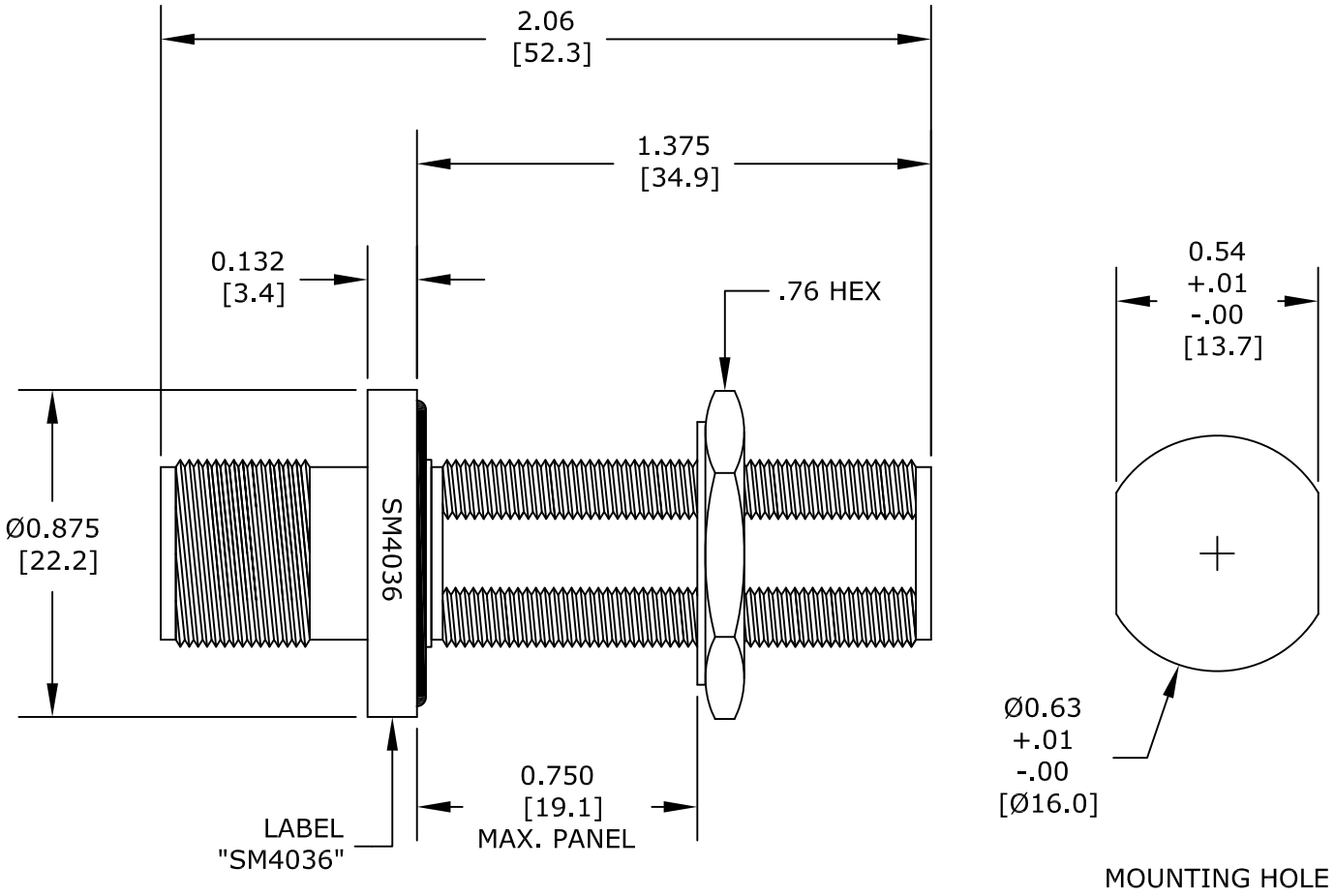


| STANDARD TOLERANCES |
|---|
| .X ±0.2 |
| .XX ±0.1 |
| .XXX ±0.05 |

*STANDARD TOLERANCES APPLY ONLY TO DIMENSIONS IN INCHES

# FAIRVIEW MICROWAVE INC.

ALLEN, TX 75013 WWW.FAIRVIEWMICROWAVE.COM

NOTES:
1. UNLESS OTHERWISE SPECIFIED ALL DIMENSIONS ARE NOMINAL.
2. ALL SPECIFICATIONS ARE SUBJECT TO CHANGE WITHOUT NOTICE AT ANY TIME.
3. DIMENSIONS ARE IN INCHES [mm].

| TITLE | DWG NO | CAGE CODE |
|---|---|---|
| | SM4036 | 3FKR5 |

| CAD FILE | 101116 | SHEET | SCALE N/A | SIZE A | 41742 |
|---|---|---|---|---|---|