REVISIONS			
REV.	DESCRIPTION	DATE	APPROVED
A	PCR SA3N1007-XX	5/8/2020	S.PONG

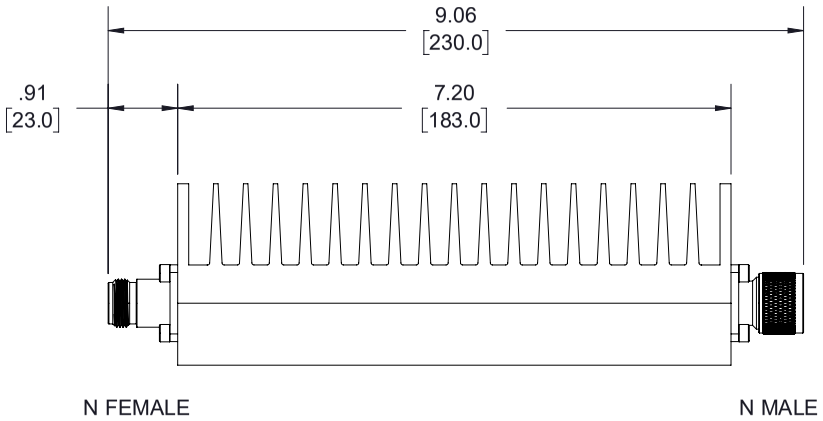

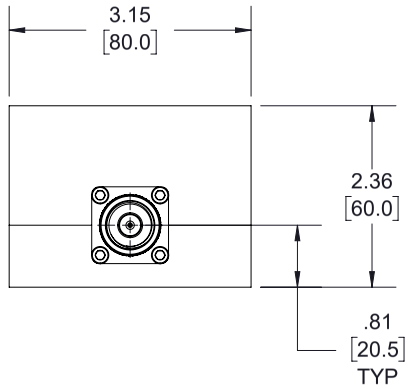

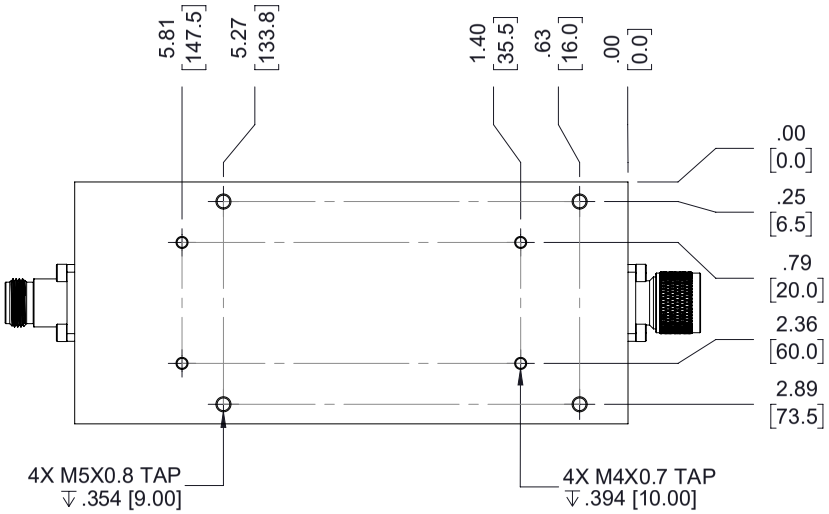

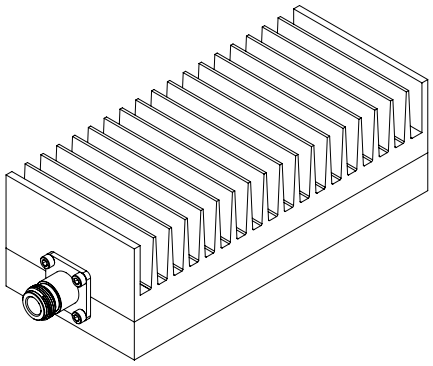

LABEL:

FAIRVIEW MICROWAVE
SA3N1007-40
D/C: YYWW

THESE COMMODITIES, TECHNOLOGY OR SOFTWARE WERE EXPORTED FROM THE UNITED STATES IN ACCORDANCE WITH THE EXPORT ADMINISTRATION REGULATIONS. DIVERSION CONTRARY TO U.S. LAW PROHIBITED.

Fairview Microwave™
an INFINITE brand

TITLE

UNLESS OTHERWISE SPECIFIED LEADING DIMENSIONS ARE INCHES
DIMENSIONS IN [ ] ARE MILLIMETERS

TOLERANCES:

.X = ±.2 [5.08]
.XX = ±.02 [.51]
.XXX = ±.005 [.13]
FRACTIONS ± 1/32
ANGLES ± 1°

CABLE LENGTH (L) TOLERANCES:

L ≤ 12 [305] = +1 [25] / -0
12 [305] < L ≤ 60 [1524] = +2 [51] / -0
60 [1524] < L ≤ 120 [3048] = +4 [102] / -0
120 [3048] < L ≤ 300 [7620] = +6 [152] / -0
300 [7620] < L = +5%L / -0

THIRD-ANGLE PROJECTION

THE INFORMATION AND DESIGN IN THIS DOCUMENT IS THE PROPERTY OF FAIRVIEW MICROWAVE CORPORATION. ALL RIGHTS RESERVED.

SHEET 1 OF 1

ALL DIMENSIONS SHOWN ARE FOR REFERENCE ONLY.

SCALE N/A

SIZE	CAGE CODE	DRAWN BY	ITEM NO.	REV
A	3FKR5	K.DANG	SA3N1007-40	A

T-Rev.D