*

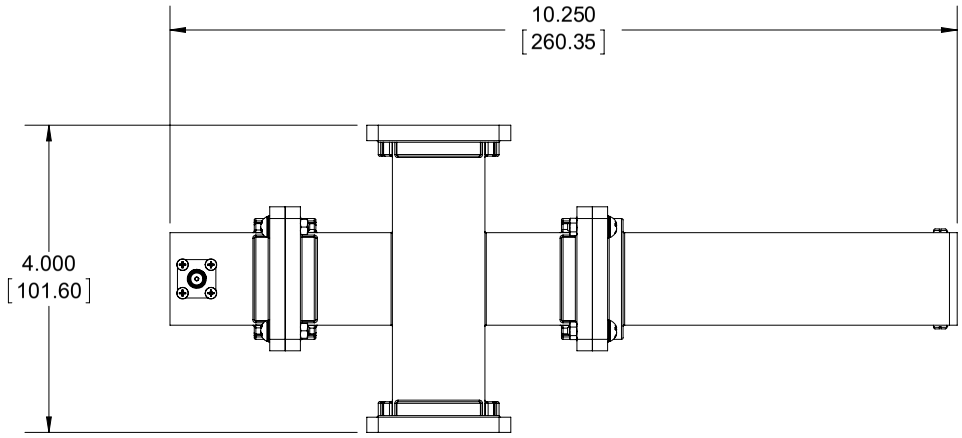

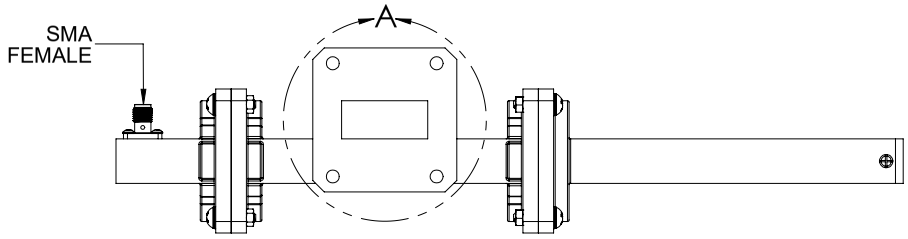

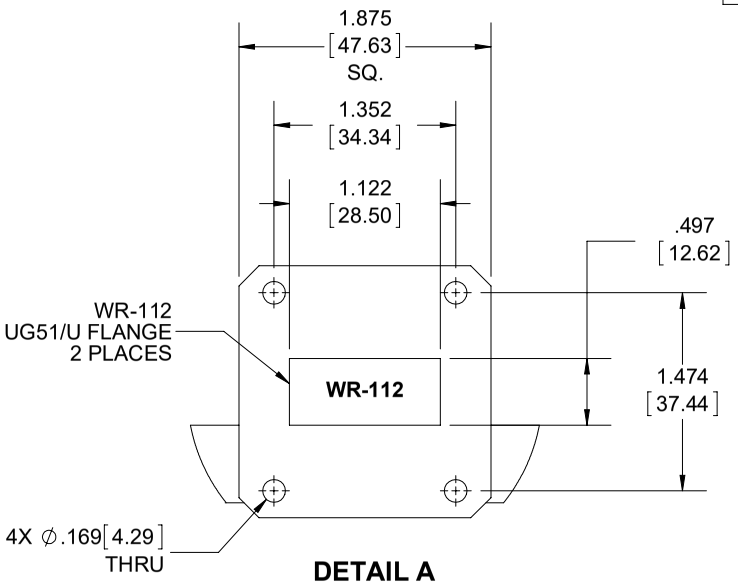

DETAIL A

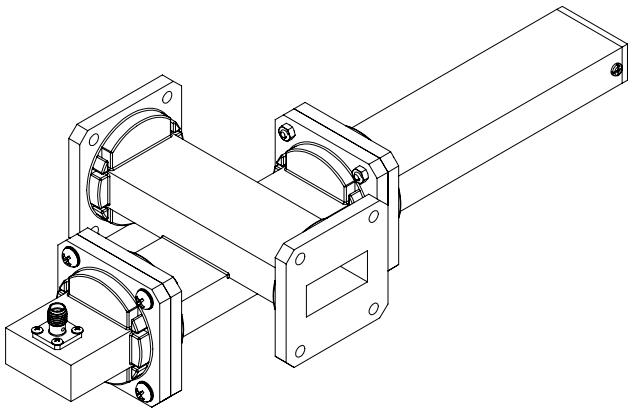

STANDARD TOLERANCES
.X ±0.2
.XX ±0.01
.XXX ±0.005

*STANDARD TOLERANCES APPLY ONLY TO DIMENSIONS IN INCHES

FAIRVIEW MICROWAVE INC.

ALLEN, TX 75013 WWW.FAIRVIEWMICROWAVE.COM

NOTES:
1. UNLESS OTHERWISE SPECIFIED ALL DIMENSIONS ARE NOMINAL.
2. ALL SPECIFICATIONS ARE SUBJECT TO CHANGE WITHOUT NOTICE AT ANY TIME.
3. DIMENSIONS ARE IN INCHES [mm].

TITLE	DWG NO	CAGE CODE
	FMWCT1085	3FKR5

CAD FILE	SHEET	SCALE	SIZE	
062817	1 OF 1	N/A	A	9999