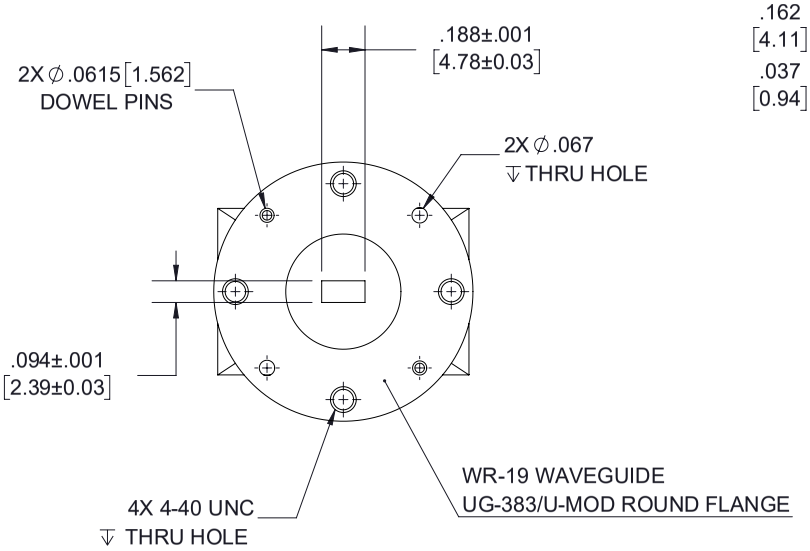

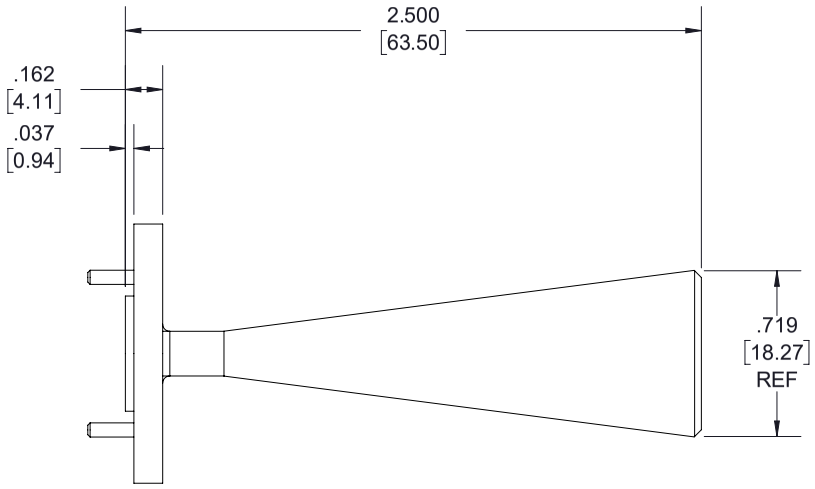

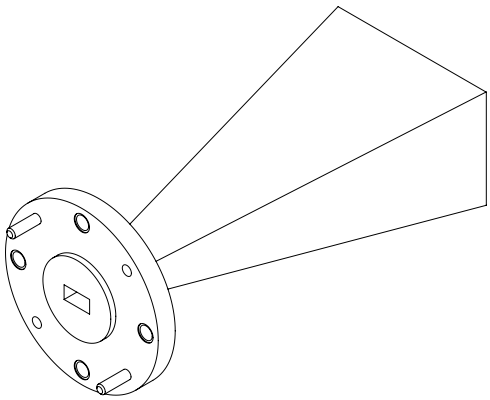

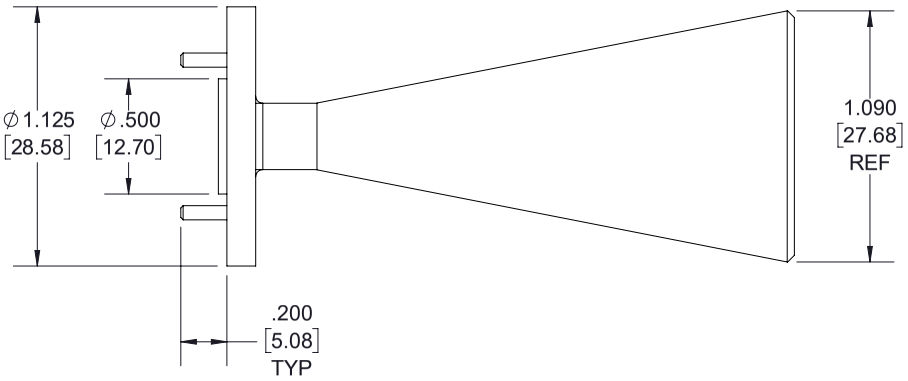

STANDARD TOLERANCES

.X	±0.2
.XX	±0.01
.XXX	±0.005

*STANDARD TOLERANCES APPLY ONLY TO DIMENSIONS IN INCHES

Fairview Microwave
RF COMPONENTS ON DEMAND. Done!

NOTES:
1. UNLESS OTHERWISE SPECIFIED ALL DIMENSIONS ARE NOMINAL.
2. ALL SPECIFICATIONS ARE SUBJECT TO CHANGE WITHOUT NOTICE AT ANY TIME.
3. DIMENSIONS ARE IN INCHES [mm].

TITLE	DWG NO	CAGE CODE
	FMWAN1007	3FKR5

CAD FILE	08/03/18	SHEET	1 OF 1	SCALE	N/A	SIZE	A	7361