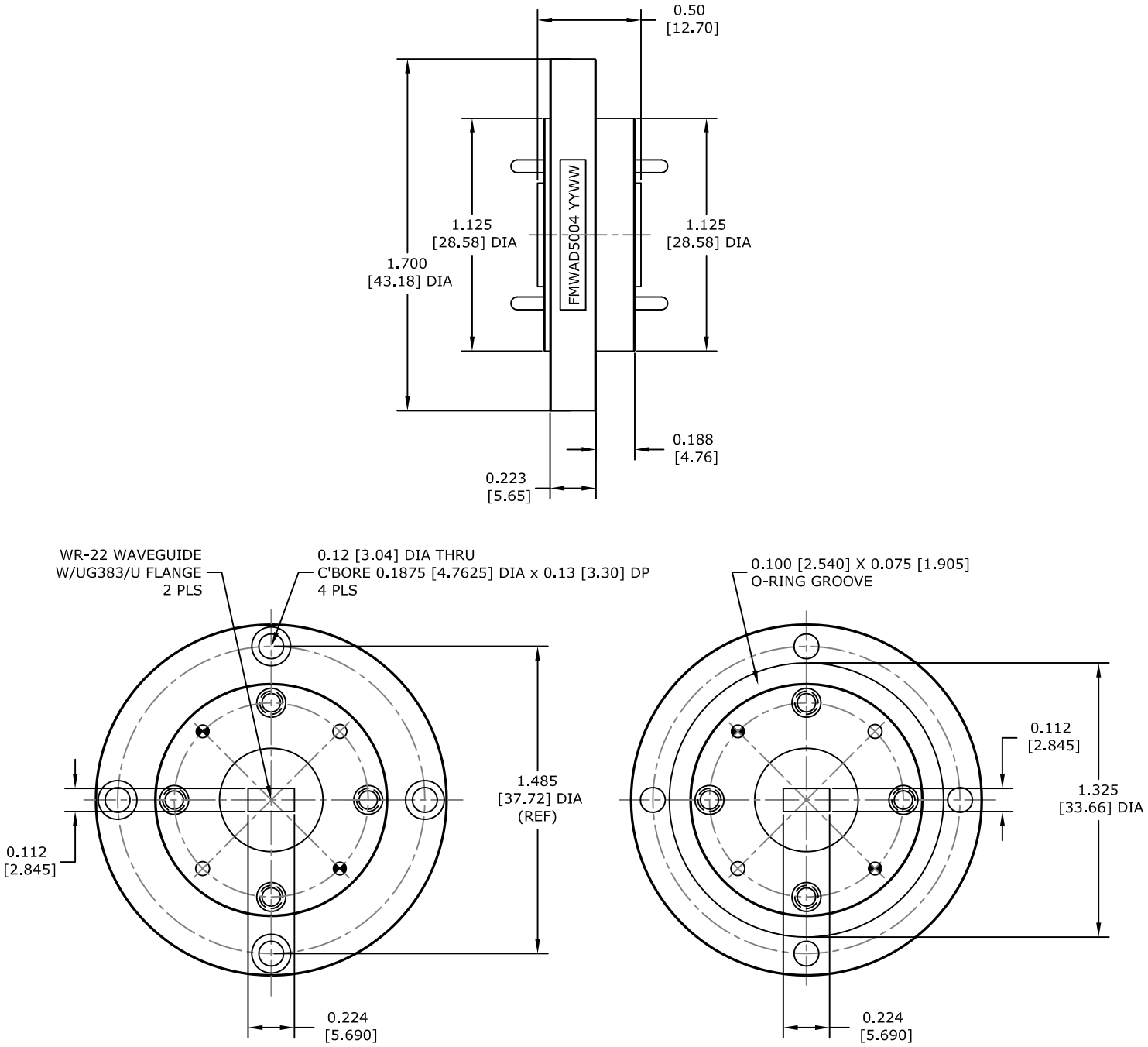

UNLESS OTHERWISE SPECIFIED:
DIMENSIONS ARE IN: inches [mm]
TOLERANCES ARE:

DECIMALS	ANGLES	FRACTIONS
.XX ±.01 [±.25]	±1/2°	± 1/64 [± 127/320]
.XXX ±.005 [±.127]		

NOTE:
O-RING INSIDE DIAMETER: 1.250" [31.750]
O-RING WIDTH: 3/32" [2.38]

* THESE DIMENSIONS AND TOLERANCES SUPERSEDE NOTE #1 ON TITLE BLOCK.

FAIRVIEW MICROWAVE INC.

ALLEN, TX 75013 WWW.FAIRVIEWMICROWAVE.COM

NOTES:
1. UNLESS OTHERWISE SPECIFIED ALL DIMENSIONS ARE NOMINAL.
2. ALL SPECIFICATIONS ARE SUBJECT TO CHANGE WITHOUT NOTICE AT ANY TIME.
3. DIMENSIONS ARE IN INCHES [mm].

TITLE	DWG NO	CAGE CODE
	FMWAD5004	3FKR5

CAD FILE	052516	SHEET	SCALE N/A	SIZE A	2233