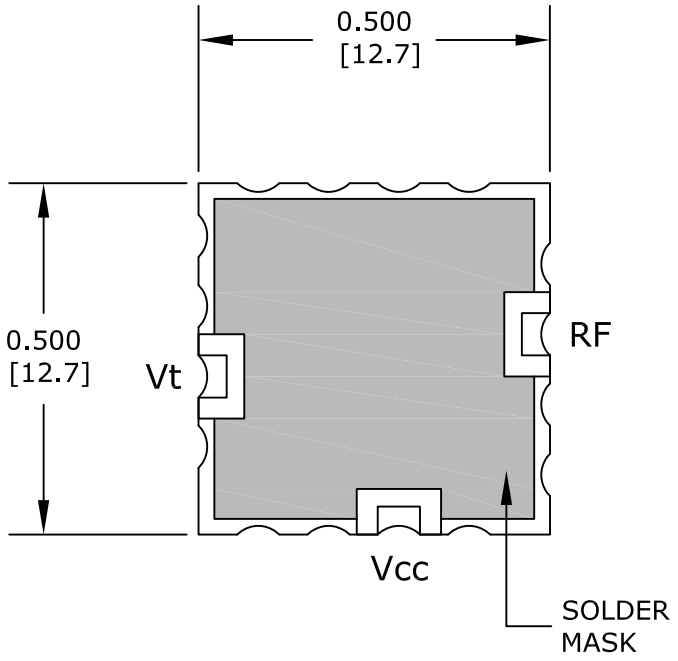

BOTTOM VIEW

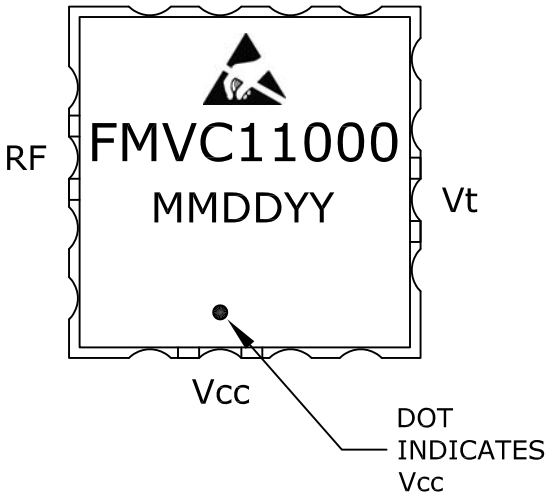

TOP VIEW

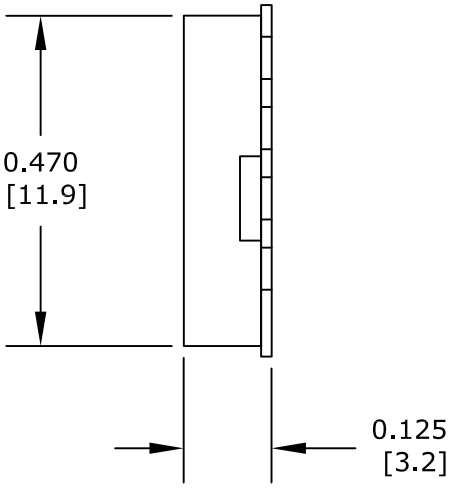

SIDE VIEW

NOTES:
1. THE CASE IS GROUND.
2. UNLESS OTHERWISE SPECIFIED ALL DIMENSIONS ARE IN INCHES [mm].
3. UNLESS OTHERWISE SPECIFIED FINISH IS 150-250 MICRO INCHES ELECTROLESS NICKEL OVER COPPER CLAD PCB, 2-5 MICRO INCHES IMMERSION GOLD, OVER NICKEL.
4. MOD PORT NOT AVAILABLE ON ALL MODELS.

FAIRVIEW MICROWAVE INC. ALLEN, TX 75013 WWW.FAIRVIEWMICROWAVE.COM	NOTES: 1. UNLESS OTHERWISE SPECIFIED ALL DIMENSIONS ARE NOMINAL. 2. ALL SPECIFICATIONS ARE SUBJECT TO CHANGE WITHOUT NOTICE AT ANY TIME. 3. DIMENSIONS ARE IN INCHES [mm].				
TITLE	DWG NO FMVC11000		CAGE CODE 3FKR5		
	CAD FILE 020316	SHEET	SCALE N/A	SIZE A	2233