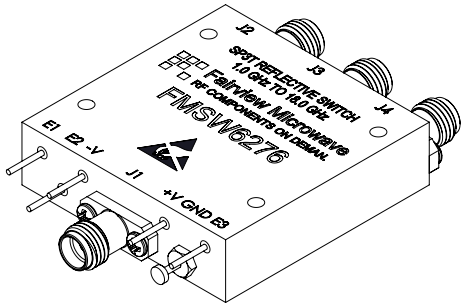

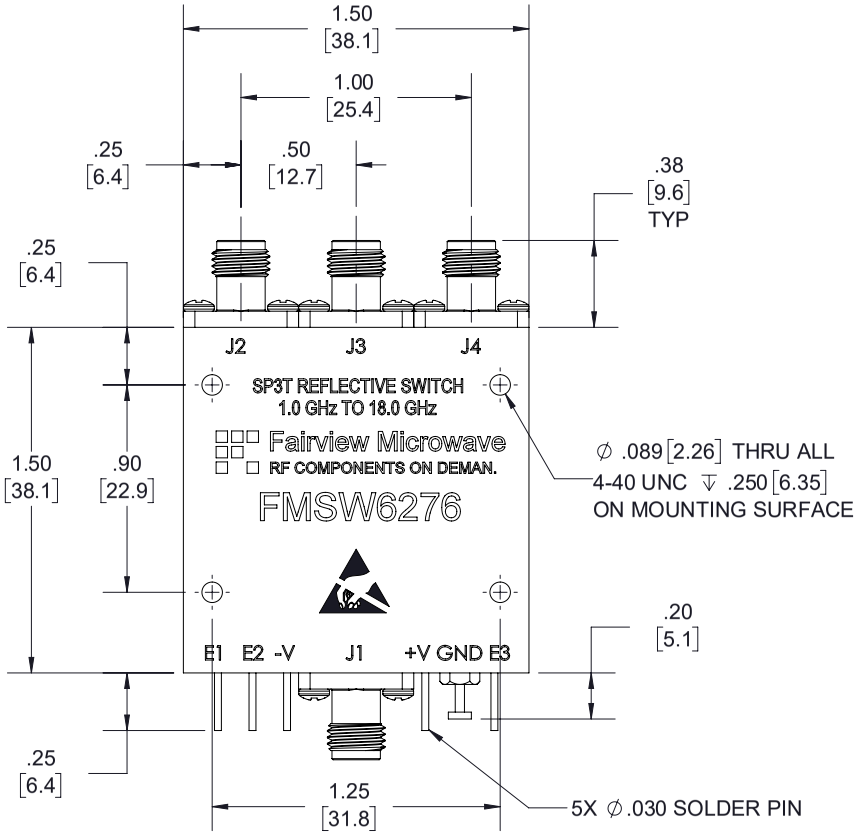

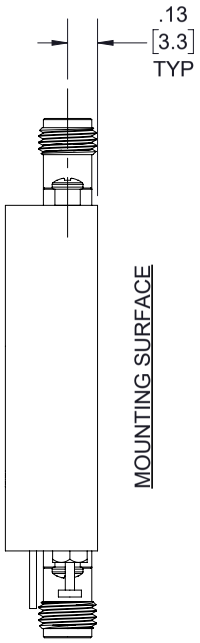

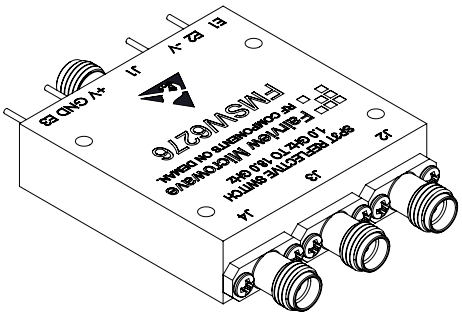

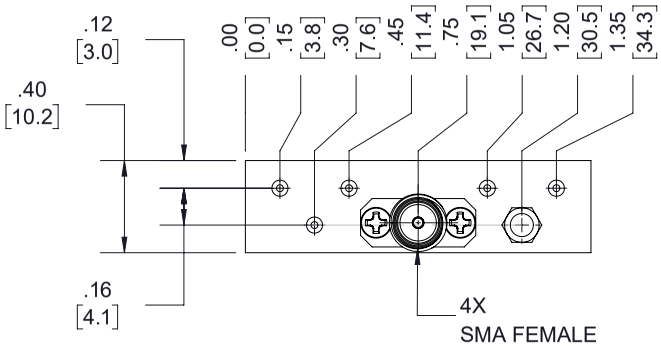

STANDARD TOLERANCES

.X	±0.2
.XX	±0.02
.XXX	±0.010

*STANDARD TOLERANCES APPLY ONLY TO DIMENSIONS IN INCHES

LOGIC TABLE

E1	E2	E3	FUNCTION
0	1	1	J1-J2 "LOW LOSS"
1	0	1	J1-J3 "LOW LOSS"
1	1	0	J1-J4 "LOW LOSS"

Fairview Microwave
RF COMPONENTS ON DEMAND. Done!

NOTES:
1. UNLESS OTHERWISE SPECIFIED ALL DIMENSIONS ARE NOMINAL.
2. ALL SPECIFICATIONS ARE SUBJECT TO CHANGE WITHOUT NOTICE AT ANY TIME.
3. DIMENSIONS ARE IN INCHES [mm].

TITLE

DWG NO FMSW6276

CAGE CODE 3FKR5

CAD FILE 04/03/18 | SHEET 1 OF 1 | SCALE N/A | SIZE A | 7361