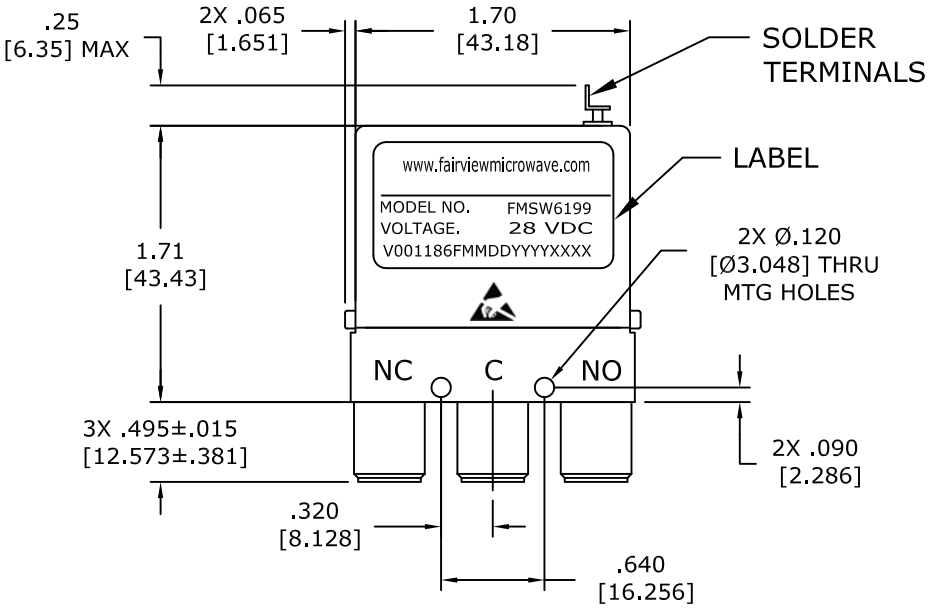

UNLESS OTHERWISE SPECIFIED
DIMENSIONS ARE IN INCHES.
TOLERANCES ARE:

DECIMALS	ANGLES
.XX ± .03 (0.76)	±1°
.XXX ± .010 (0.254)	FRACTIONS ±1/16

HOLE DIAMETER	TOLERANCE
.0135 TO .125 (0.343 TO 3.175)	+.004 TO -.001 (+0.102 TO -0.025)
.126 TO .250 (3.200 TO 6.350)	+.005 TO -.001 (+0.127 TO -0.025)
.251 TO .500 (6.375 TO 12.700)	+.006 TO -.001 (+0.152 TO -0.025)
.501 TO .750 (12.725 TO 19.050)	+.008 TO -.001 (+0.203 TO -0.025)
.751 TO 1.000 (19.075 TO 25.400)	+.010 TO -.001 (+0.254 TO -0.025)
1.001 TO 2.000 (25.425 TO 50.800)	+.012 TO -.001 (+0.305 TO -0.025)

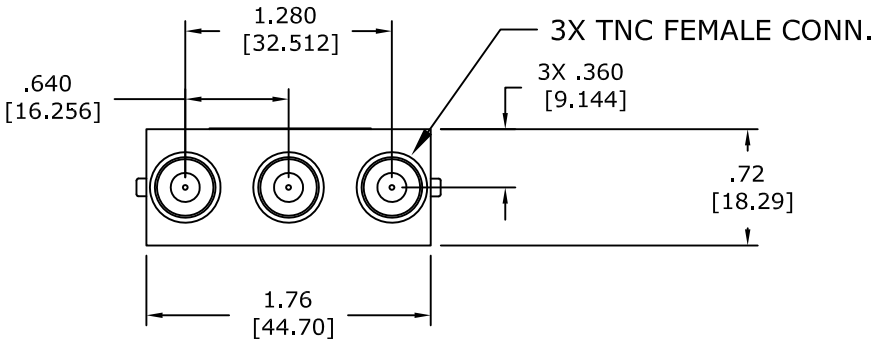

* THESE DIMENSIONS AND TOLERANCES SUPERSEDE NOTE #1 ON TITLE BLOCK.

FAIRVIEW MICROWAVE INC.

ALLEN, TX 75013 WWW.FAIRVIEWMICROWAVE.COM

NOTES:
1. UNLESS OTHERWISE SPECIFIED ALL DIMENSIONS ARE NOMINAL.
2. ALL SPECIFICATIONS ARE SUBJECT TO CHANGE WITHOUT NOTICE AT ANY TIME.
3. DIMENSIONS ARE IN INCHES [mm].

TITLE	DWG NO	CAGE CODE
	FMSW6199	3FKR5

CAD FILE	SHEET	SCALE	SIZE	
062915		N/A	A	2233