REVISION					
ZONE	REV	DESCRIPTION	DATE	CHANGED BY	APPROVED
	A	INITIAL RELEASE	03/21/2025	KDANG	JNAJERA

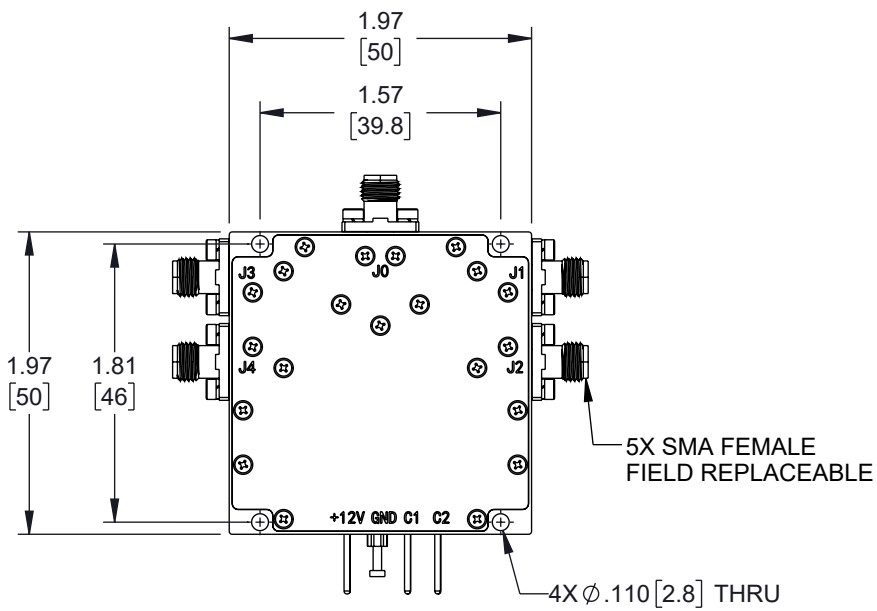

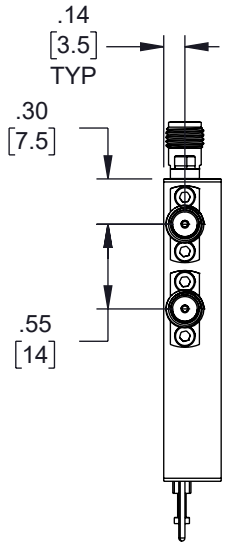

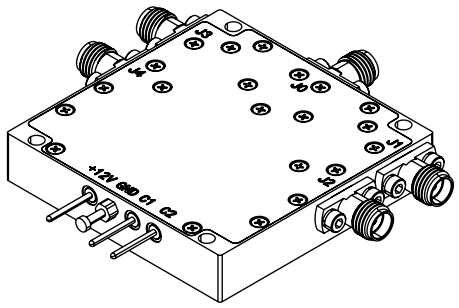

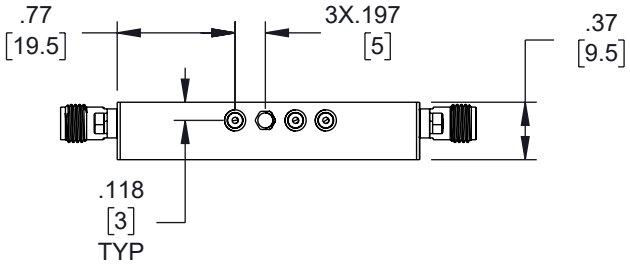

TRUTH TABLE

TTL Control Voltage THRESHOLD		Low(0)=0~0.8V High(1)=2.8~5V
Control Input TTL		Signal Path State
c1	c2	
0	0	J0-J1
0	1	J0-J2
1	0	J0-J3
1	1	J0-J4

NOTES:

1. HEAT SINK REQUIRED FOR PROPER OPERATION, UNIT IS COOLED BY CONDUCTING TO HEAT SINK.
2. THE PART INCLUDE THE LABEL (NOT SHOWN) LABEL INCLUDE: BRAND NAME, PART NUMBER, SERIAL NUMBER AND ESD AWARENESS SYMBOLS.

THE INFORMATION CONTAINED IN THIS DRAWING IS THE SOLE PROPERTY OF INFINITE ELECTRONICS, INC. ANY REPRODUCTION IN PART OR WHOLE WITHOUT THE WRITTEN PERMISSION OF INFINITE ELECTRONICS, INC. IS PROHIBITED. THESE COMMODITIES, TECHNOLOGY OR SOFTWARE WERE EXPORTED FROM THE UNITED STATES IN ACCORDANCE WITH THE EXPORT ADMINISTRATION REGULATIONS. DIVERSION CONTRARY TO U.S. LAW PROHIBITED.

UNLESS OTHERWISE SPECIFIED
LEADING DIMENSIONS ARE INCHES
DIMENSIONS IN [ ] ARE MILLIMETERS

TOLERANCES:

.X = ±.2 [5]	FRACTIONS
.XX = ±.02 [0.5]	± 1/32
.XXX = ±.005 [0.13]	ANGLES ± 1°

CABLE LENGTH TOLERANCES:
≤12 [305] = +1 [25] / -0
>12 [305] ≤ 60 [1524] = +2 [51] / -0
>60 [1524] ≤ 120 [3048] = +4 [102] / -0
>120 [3048] ≤ 300 [7620] = +6 [152] / -0
>300 [7620] = +5% / -0

ALL DIMENSIONS ARE FOR REFERENCE ONLY AND SUBJECT TO CHANGE WITHOUT NOTICE. UN-DIMENSIONED/NON-CRITICAL FEATURES MAY VARY IN SIZE AND LOCATION COLORS MAY VARY

Fairview Microwave®
an INFINITE brand
Website: www.FairviewMicrowave.com
Phone: 1.800.715.4396 | 1.972.649.6678

INTERPRET ALL DIMENSIONS AND TOLERANCES PER ASME Y14.5

SCALE	SHEET
NONE	1 OF 2

DESCRIPTION
REFLECTIVE SP4T PIN DIODE SWITCH OPERATING FROM 10 MHz TO 18 GHz UP TO 10 Watt (+40 DBM) AND FIELD REPLACEABLE SMA WITH HEATSINK

SIZE	CAGE CODE	DRAWN BY	ITEM NO.	REV
A	3FKR5	KDANG	FMSW5013	A

FM DS Rev-D4 Asize

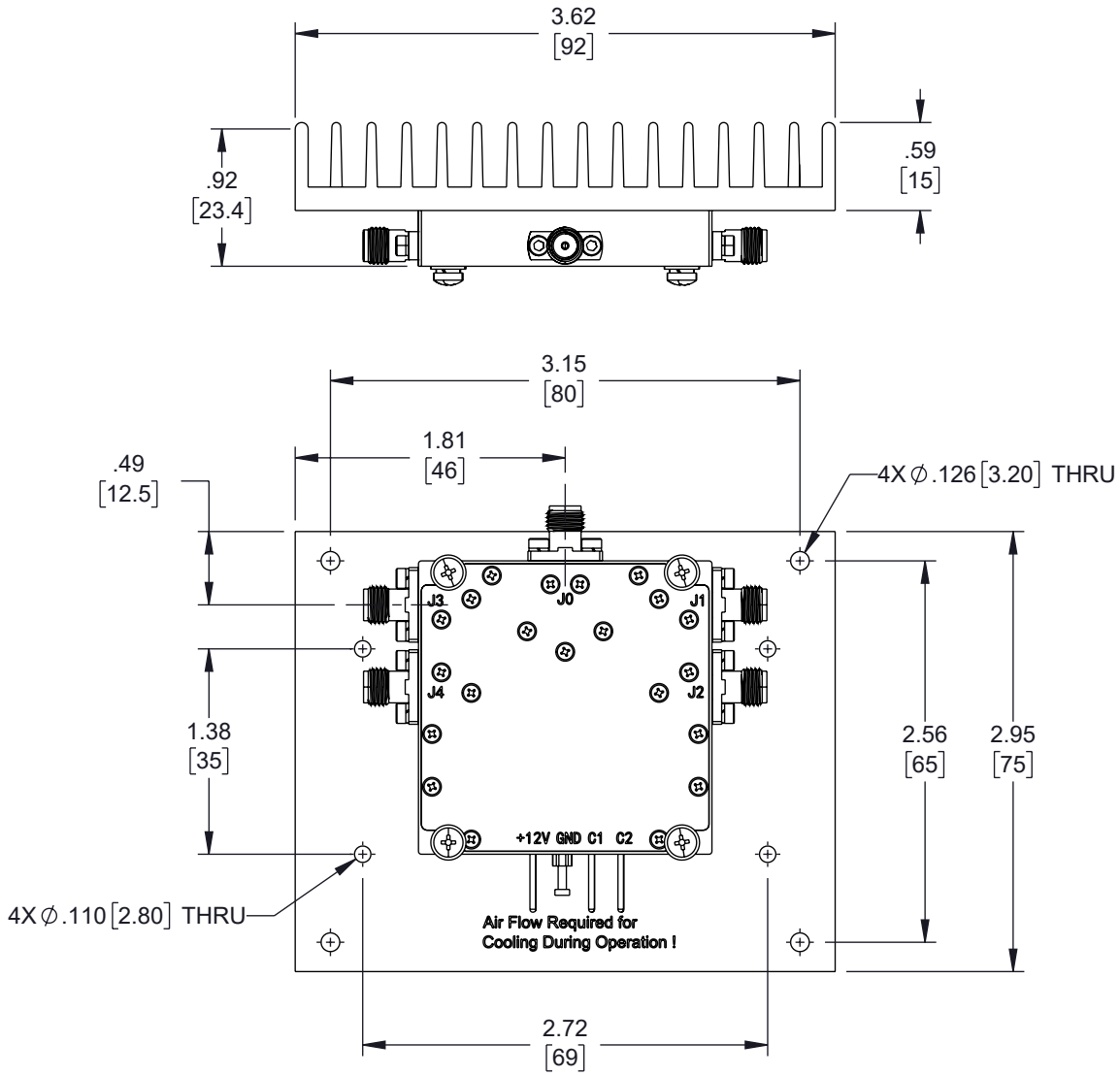

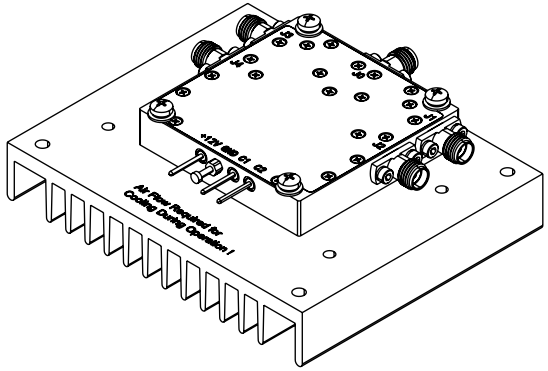

Fairview Microwave®
an INFINITE brand

Website: www.FairviewMicrowave.com
Phone: 1.800.715.4396 | 1.972.649.6678

INTERPRET ALL DIMENSIONS AND TOLERANCES PER ASME Y14.5

SCALE	SHEET
NONE	2 OF 2

DESCRIPTION
REFLECTIVE SP4T PIN DIODE SWITCH OPERATING FROM 10 MHz TO 18 GHz UP TO 10 Watt (+40 DBM) AND FIELD REPLACEABLE SMA WITH HEATSINK

SIZE	CAGE CODE	DRAWN BY	ITEM NO.	REV
A	3FKR5	KDANG	FMSW5013	A

THE INFORMATION CONTAINED IN THIS DRAWING IS THE SOLE PROPERTY OF INFINITE ELECTRONICS, INC. ANY REPRODUCTION IN PART OR WHOLE WITHOUT THE WRITTEN PERMISSION OF INFINITE ELECTRONICS, INC. IS PROHIBITED. THESE COMMODITIES, TECHNOLOGY OR SOFTWARE WERE EXPORTED FROM THE UNITED STATES IN ACCORDANCE WITH THE EXPORT ADMINISTRATION REGULATIONS. DIVERSION CONTRARY TO U.S. LAW PROHIBITED.

ALL DIMENSIONS ARE FOR REFERENCE ONLY AND SUBJECT TO CHANGE WITHOUT NOTICE. UN-DIMENSIONED/NON-CRITICAL FEATURES MAY VARY IN SIZE AND LOCATION COLORS MAY VARY