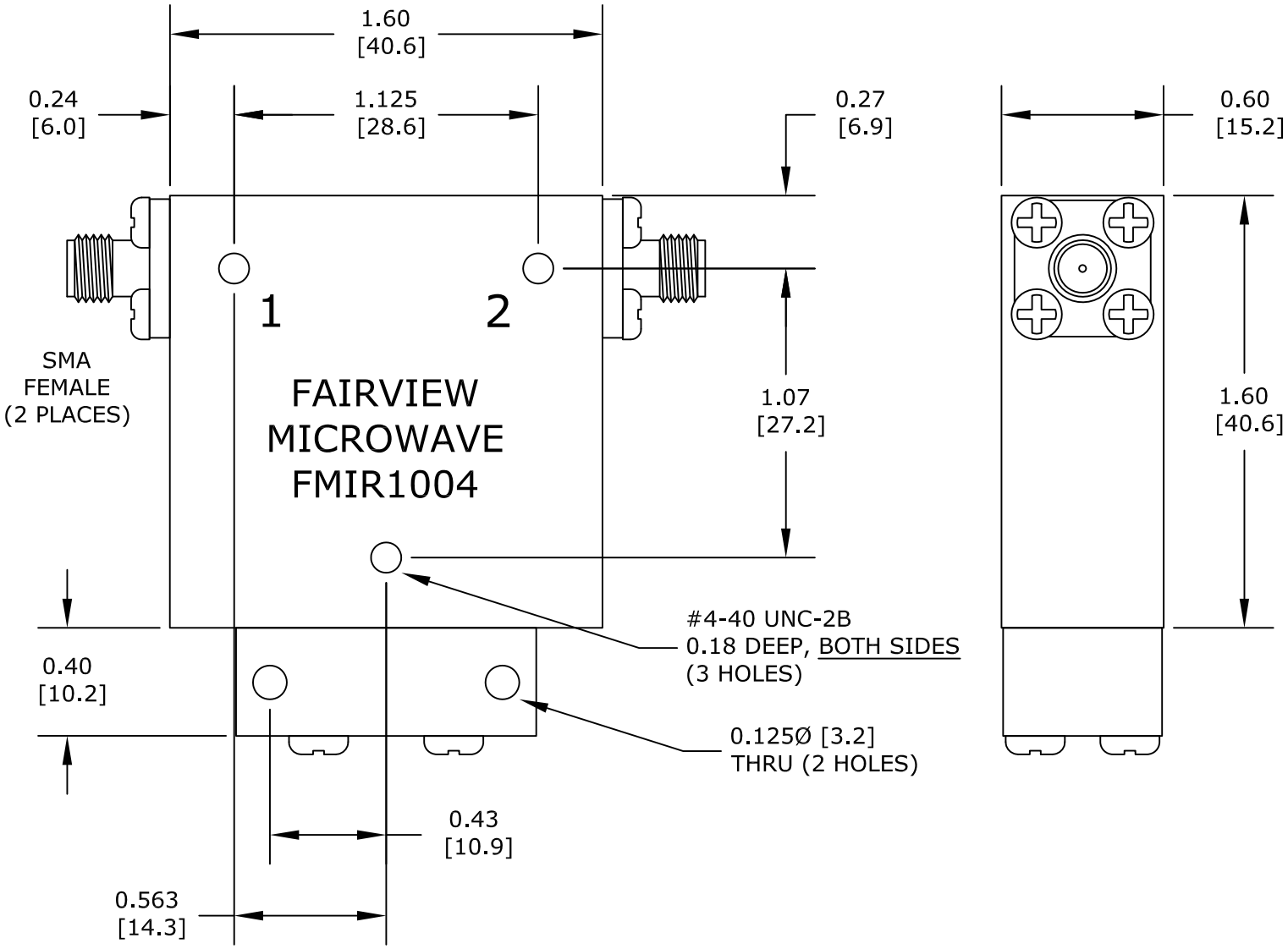

FAIRVIEW MICROWAVE INC. ALLEN, TX 75013 WWW.FAIRVIEWMICROWAVE.COM	NOTES: 1. UNLESS OTHERWISE SPECIFIED ALL DIMENSIONS ARE NOMINAL. 2. ALL SPECIFICATIONS ARE SUBJECT TO CHANGE WITHOUT NOTICE AT ANY TIME. 3. DIMENSIONS ARE IN INCHES [mm].				
TITLE	DWG NO FMIR1004		CAGE CODE 3FKR5		
	CAD FILE 012616	SHEET	SCALE N/A	SIZE A	2233