| REVISION | | | | | |
|---|---|---|---|---|---|
| ZONE | REV | DESCRIPTION | DATE | CHANGED BY | APPROVED |
| | B | UPDATED PER ECO-13489 | 03/18/2024 | DMAY | AGANWANI |

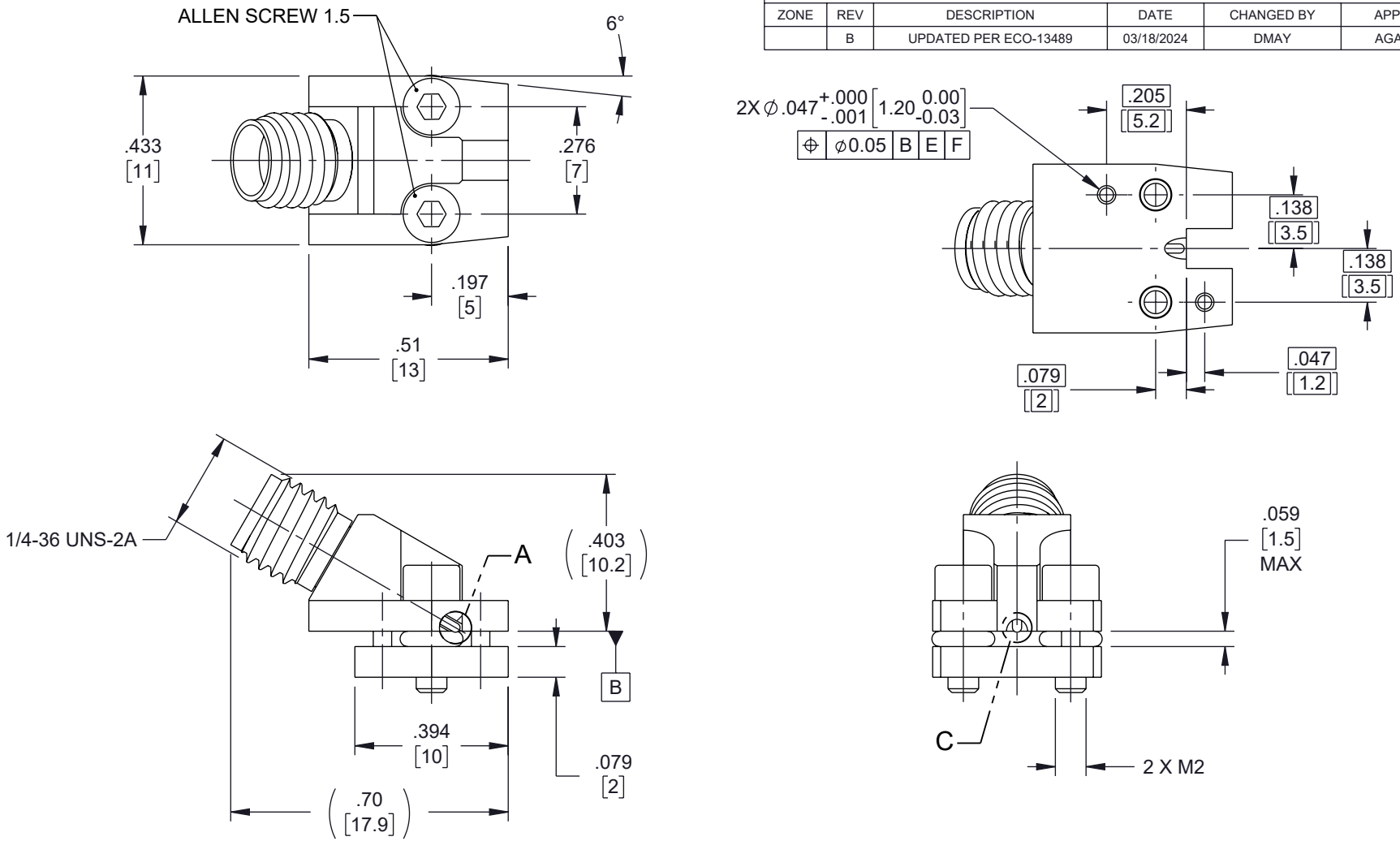


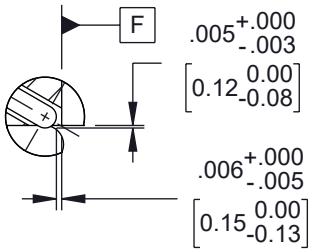


DETAIL A

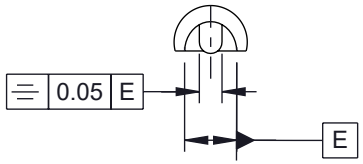


DETAIL C

UNLESS OTHERWISE SPECIFIED
LEADING DIMENSIONS ARE INCHES
DIMENSIONS IN [ ] ARE MILLIMETERS

TOLERANCES:

| | |
|---|---|
| .X = ±.2 [5] | FRACTIONS |
| .XX = ±.02 [0.5] | ± 1/32 |
| .XXX = ±.005 [0.13] | ANGLES ± 1° |

CABLE LENGTH TOLERANCES:
≤12 [305] = +1 [25] / -0
>12 [305] ≤ 60 [1524] = +2 [51] / -0
>60 [1524] ≤ 120 [3048] = +4 [102] / -0
>120 [3048] ≤ 300 [7620] = +6 [152] / -0
>300 [7620] = +5% / -0

ALL DIMENSIONS ARE FOR REFERENCE ONLY AND SUBJECT TO CHANGE WITHOUT NOTICE.
UN-DIMENSIONED/NON-CRITICAL FEATURES MAY VARY IN SIZE AND LOCATION
COLORS MAY VARY

Fairview Microwave®
an INFINITE brand

Website: www.FairviewMicrowave.com
Phone: 1.800.715.4396 | 1.972.649.6678

INTERPRET ALL DIMENSIONS AND TOLERANCES PER ASME Y14.5

| SCALE | SHEET |
|---|---|
| NONE | 1 OF 2 |

DESCRIPTION
2.92 mm JACK 30° ANGLE SOLDERLESS PCB MOUNT 2 HOLE FLANGE 40 GHz VSWR 1.25

| SIZE | CAGE CODE | DRAWN BY | ITEM NO. | REV |
|---|---|---|---|---|
| A | 3FKR5 | KGLEBOVA | FMCN45920 | B |

THE INFORMATION CONTAINED IN THIS DRAWING IS THE SOLE PROPERTY OF INFINITE ELECTRONICS, INC. ANY REPRODUCTION IN PART OR WHOLE WITHOUT THE WRITTEN PERMISSION OF INFINITE ELECTRONICS, INC. IS PROHIBITED. THESE COMMODITIES, TECHNOLOGY OR SOFTWARE WERE EXPORTED FROM THE UNITED STATES IN ACCORDANCE WITH THE EXPORT ADMINISTRATION REGULATIONS. DIVERSION CONTRARY TO U.S. LAW PROHIBITED.

FM DS Rev-D4 Asize

ASSEMBLY INSTRUCTIONS

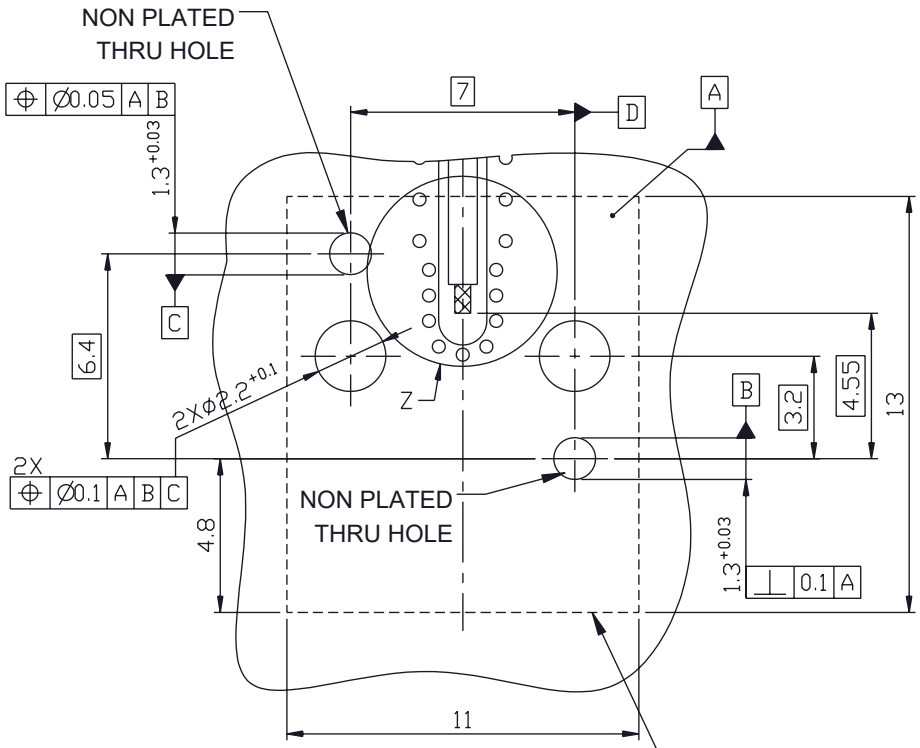


S = SPACE/GAP BETWEEN SIGNALING PATH AND GROUND PLANE
W = WIDTH OF SIGNAL PATH

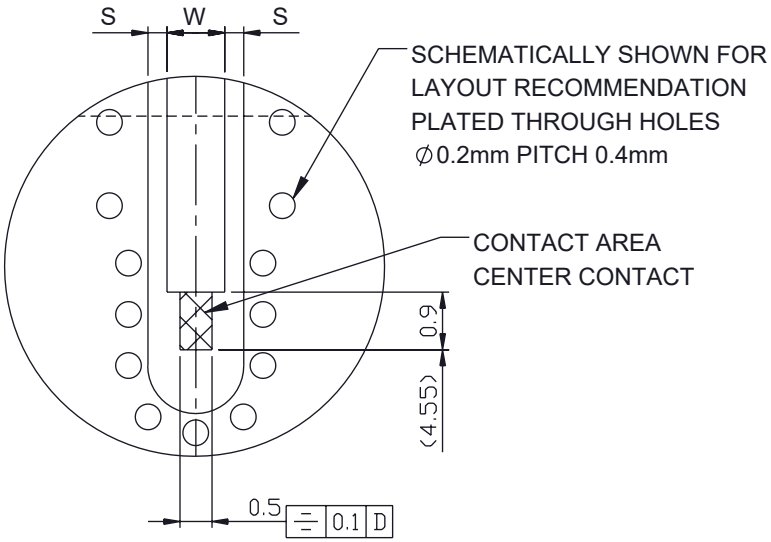


DETAIL Z

1. CONNECTOR OUTLINE.
   METALIZED SURFACE, NO SOLDER STOP.
2. KEEP OUT AREA FOR THE BACKSIDE OF THE PCB.
   NO TRACES ON SURFACE ALLOWED.

Fairview Microwave®
an INFINITE brand

Website: www.FairviewMicrowave.com
Phone: 1.800.715.4396 | 1.972.649.6678

INTERPRET ALL DIMENSIONS AND TOLERANCES PER ASME Y14.5

| SCALE | SHEET |
|---|---|
| NONE | 2 OF 2 |

DESCRIPTION

2.92 mm JACK 30° ANGLE SOLDERLESS PCB MOUNT 2 HOLE FLANGE 40 GHz VSWR 1.25

| SIZE | CAGE CODE | DRAWN BY | ITEM NO. | REV |
|---|---|---|---|---|
| A | 3FKR5 | KGLEBOVA | FMCN45920 | B |

THE INFORMATION CONTAINED IN THIS DRAWING IS THE SOLE PROPERTY OF INFINITE ELECTRONICS, INC. ANY REPRODUCTION IN PART OR WHOLE WITHOUT THE WRITTEN PERMISSION OF INFINITE ELECTRONICS, INC. IS PROHIBITED. THESE COMMODITIES, TECHNOLOGY OR SOFTWARE WERE EXPORTED FROM THE UNITED STATES IN ACCORDANCE WITH THE EXPORT ADMINISTRATION REGULATIONS. DIVERSION CONTRARY TO U.S. LAW PROHIBITED.

ALL DIMENSIONS ARE FOR REFERENCE ONLY AND SUBJECT TO CHANGE WITHOUT NOTICE. UN-DIMENSIONED/NON-CRITICAL FEATURES MAY VARY IN SIZE AND LOCATION COLORS MAY VARY