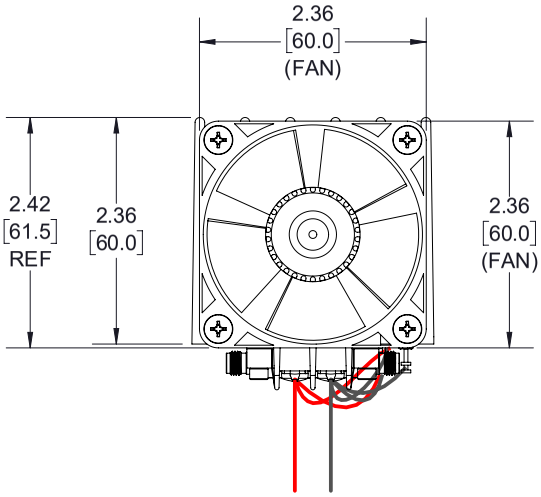

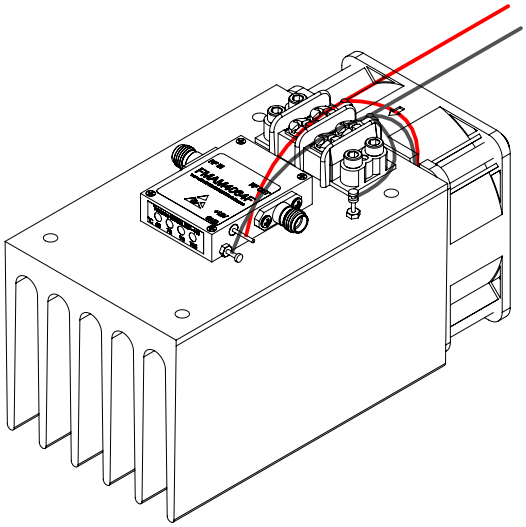

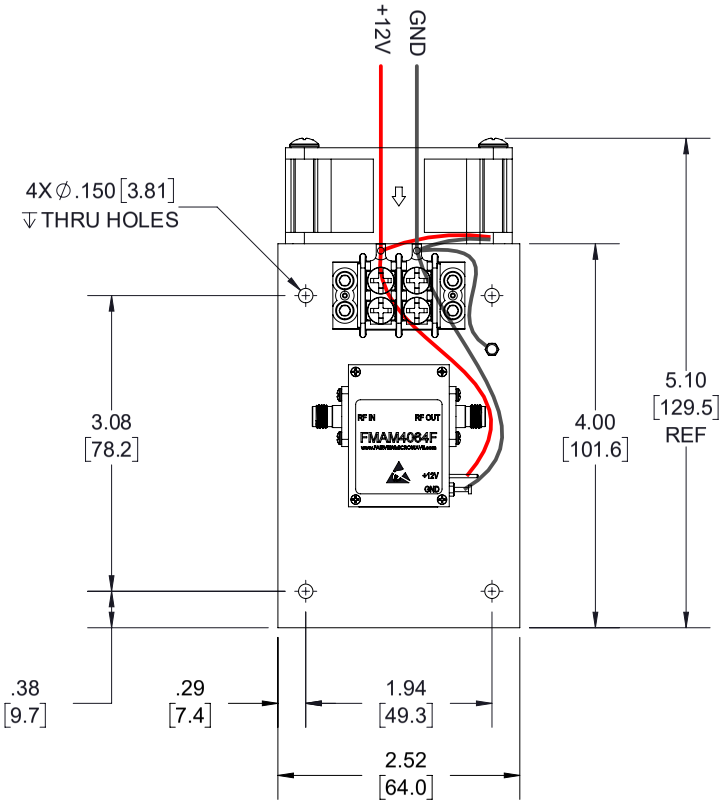

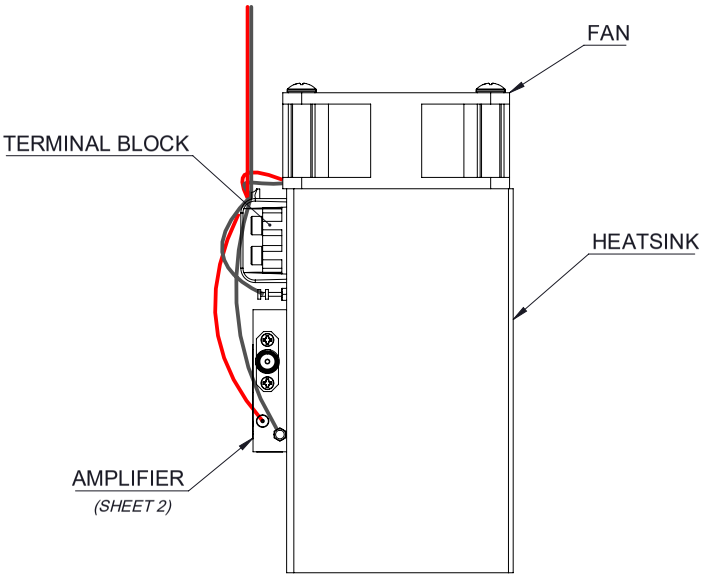

STANDARD TOLERANCES
.X ±0.2
.XX ±0.01
.XXX ±0.005

*STANDARD TOLERANCES APPLY ONLY TO DIMENSIONS IN INCHES

Fairview Microwave
an INFINITE brand

NOTES:
1. UNLESS OTHERWISE SPECIFIED ALL DIMENSIONS ARE NOMINAL.
2. ALL SPECIFICATIONS ARE SUBJECT TO CHANGE WITHOUT NOTICE AT ANY TIME.
3. DIMENSIONS ARE IN INCHES [mm].

TITLE	DWG NO	CAGE CODE
	FMAM4064F	3FKR5

CAD FILE	09/24/19	SHEET	1 OF 2	SCALE N/A	SIZE A	7361