REVISIONS			
REV.	DESCRIPTION	DATE	APPROVED
B	PCR PE9863B-10 20210526	06/07/2021	KHIETPAS

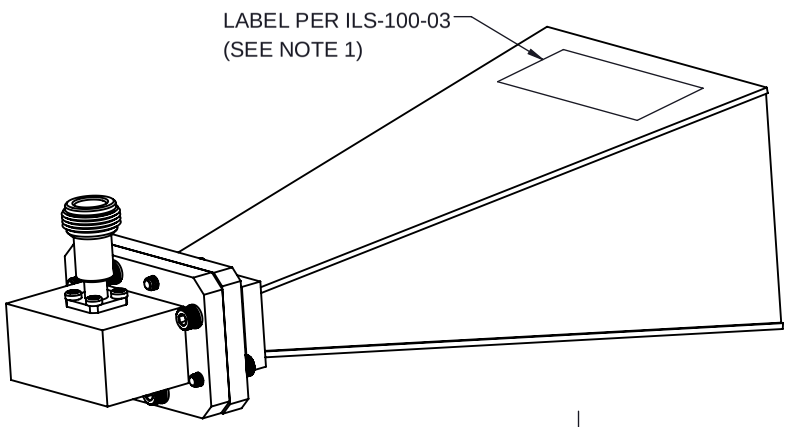

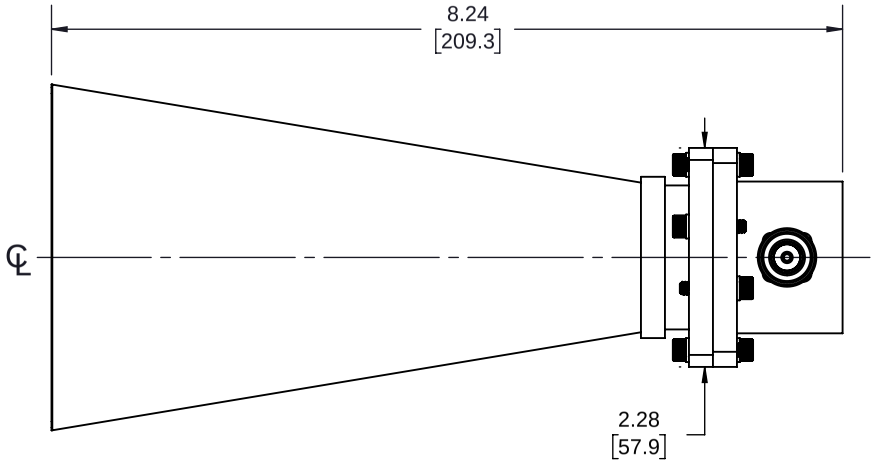

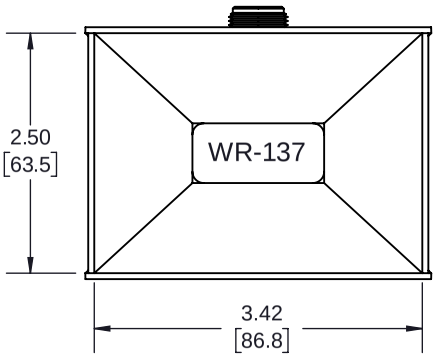

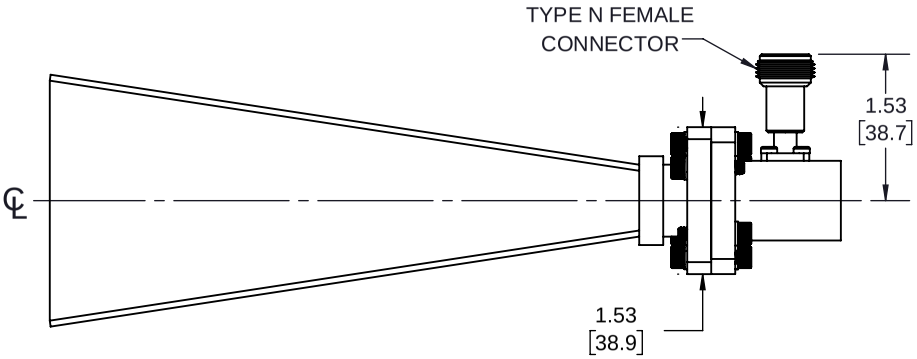

NOTES:

1. LABEL PER ILS-100-03 (FOR INTERNAL REFERENCE ONLY)
   LABEL LOCATION FOR REFERENCE ONLY

THESE COMMODITIES, TECHNOLOGY OR SOFTWARE WERE EXPORTED FROM THE UNITED STATES IN ACCORDANCE WITH THE EXPORT ADMINISTRATION REGULATIONS. DIVERSION CONTRARY TO U.S. LAW PROHIBITED.

Fairview Microwave

an INFINITE brand

TITLE

UNLESS OTHERWISE SPECIFIED LEADING DIMENSIONS ARE INCHES
DIMENSIONS IN [ ] ARE MILLIMETERS

TOLERANCES:

.X = Ñ.2 [5.08]
.XX = Ñ.02 [.51]
.XXX = Ñ.005 [.13]
FRACTIONS Ñ1/32
ANGLES Ñ1Á

CABLE LENGTH (L) TOLERANCES:

L Ò12 [305] = +1 [25] / -0
12 [305] < L Ò60 [1524] = +2 [51] / -0
60 [1524] < L Ò120 [3048] = +4 [102] / -0
120 [3048] < L Ò300 [7620] = +6 [152] / -0
300 [7620] < L = +5%L / -0

THIRD-ANGLE PROJECTION

THE INFORMATION AND DESIGN IN THIS DOCUMENT IS THE PROPERTY OF FAIRVIEW MICROWAVE CORPORATION. ALL RIGHTS RESERVED.

SHEET 1 OF 1

ALL DIMENSIONS SHOWN ARE FOR REFERENCE ONLY.

SCALE N/A

SIZE	CAGE CODE	DRAWN BY	ITEM NO.	REV
A	3FKR5	BPUCHASKI	FM9859B/NF-15	B

T-Rev.D