3D PDF INSTRUCTIONS

1. CLICK ON DRAWING TO ACTIVATE
2. DRAG TO ROTATE
3. SCROLL MOUSE WHEEL TO ZOOM
4. HOLD BOTH LEFT AND RIGHT BUTTONS TO PAN

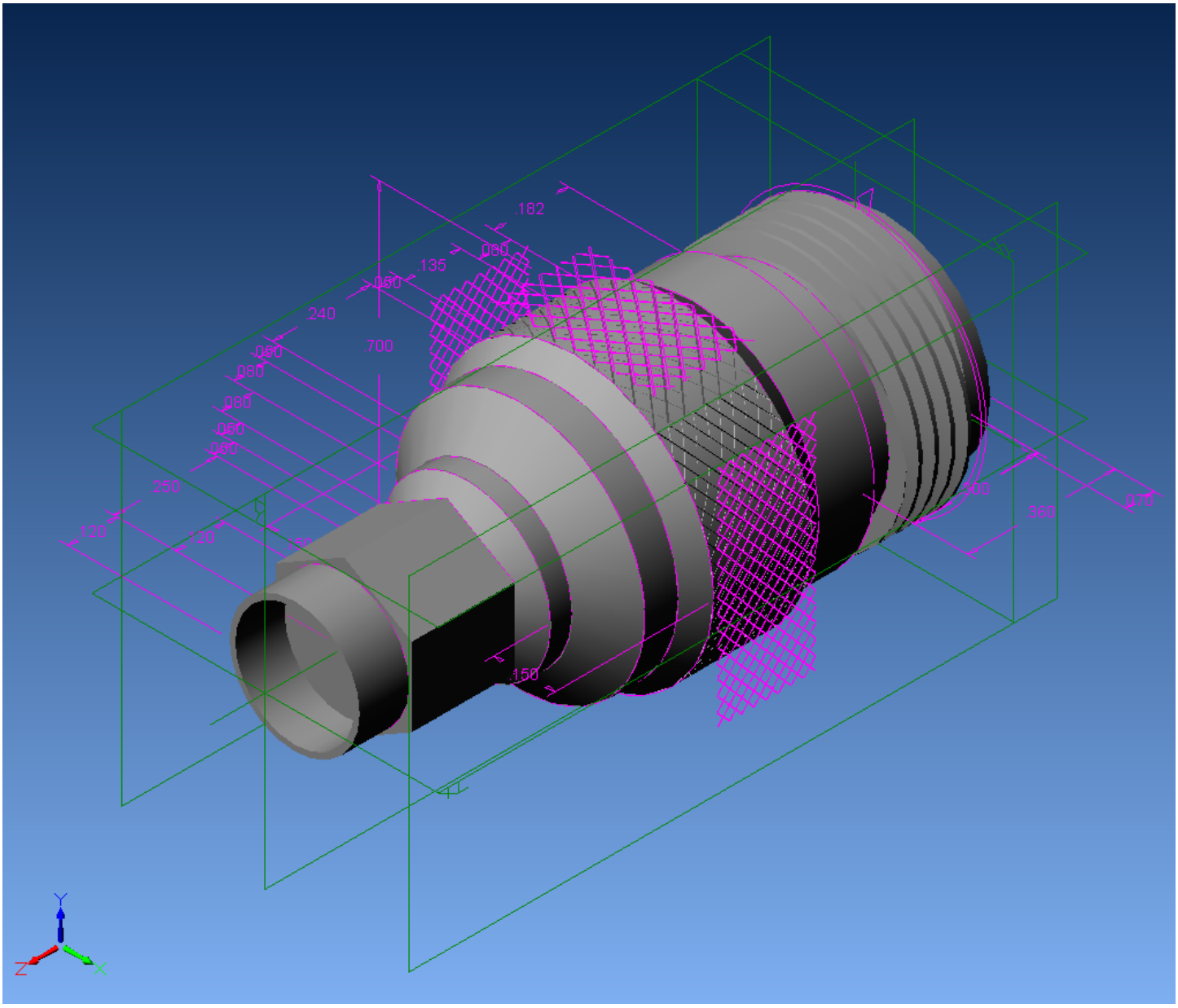

S.M. ELECTRONICS L.L.C
SM5817