3D PDF INSTRUCTIONS

1. CLICK ON DRAWING TO ACTIVATE
2. DRAG TO ROTATE
3. SCROLL MOUSE WHEEL TO ZOOM
4. HOLD BOTH LEFT & RIGHT BUTTONS TO PAN

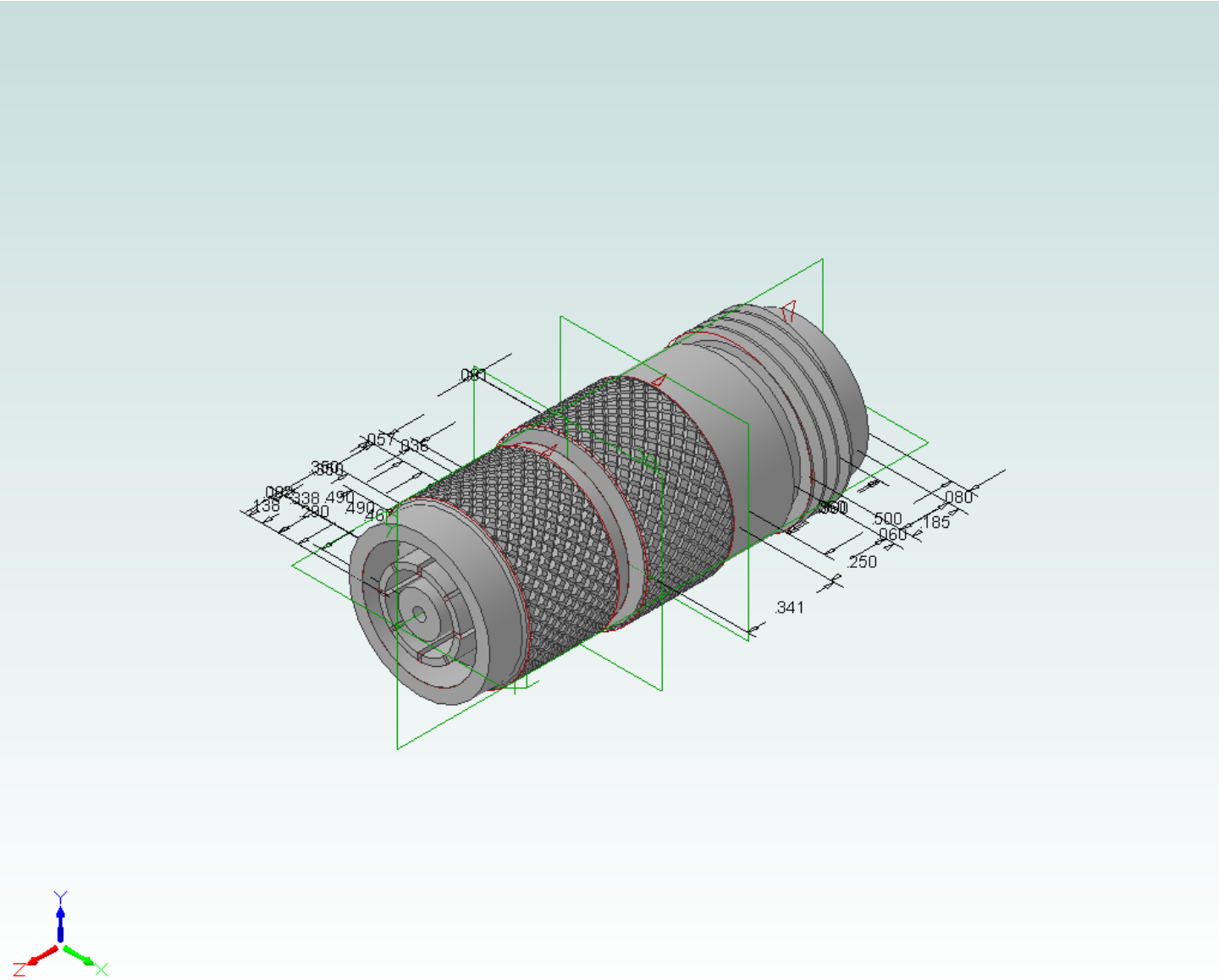

Fairview Microwave Inc.
SM5795