3D PDF INSTRUCTIONS

1. CLICK ON DRAWING TO ACTIVATE
2. DRAG TO ROTATE
3. SCROLL MOUSE WHEEL TO ZOOM
4. HOLD BOTH LEFT & RIGHT MOUSE BUTTONS TO PAN

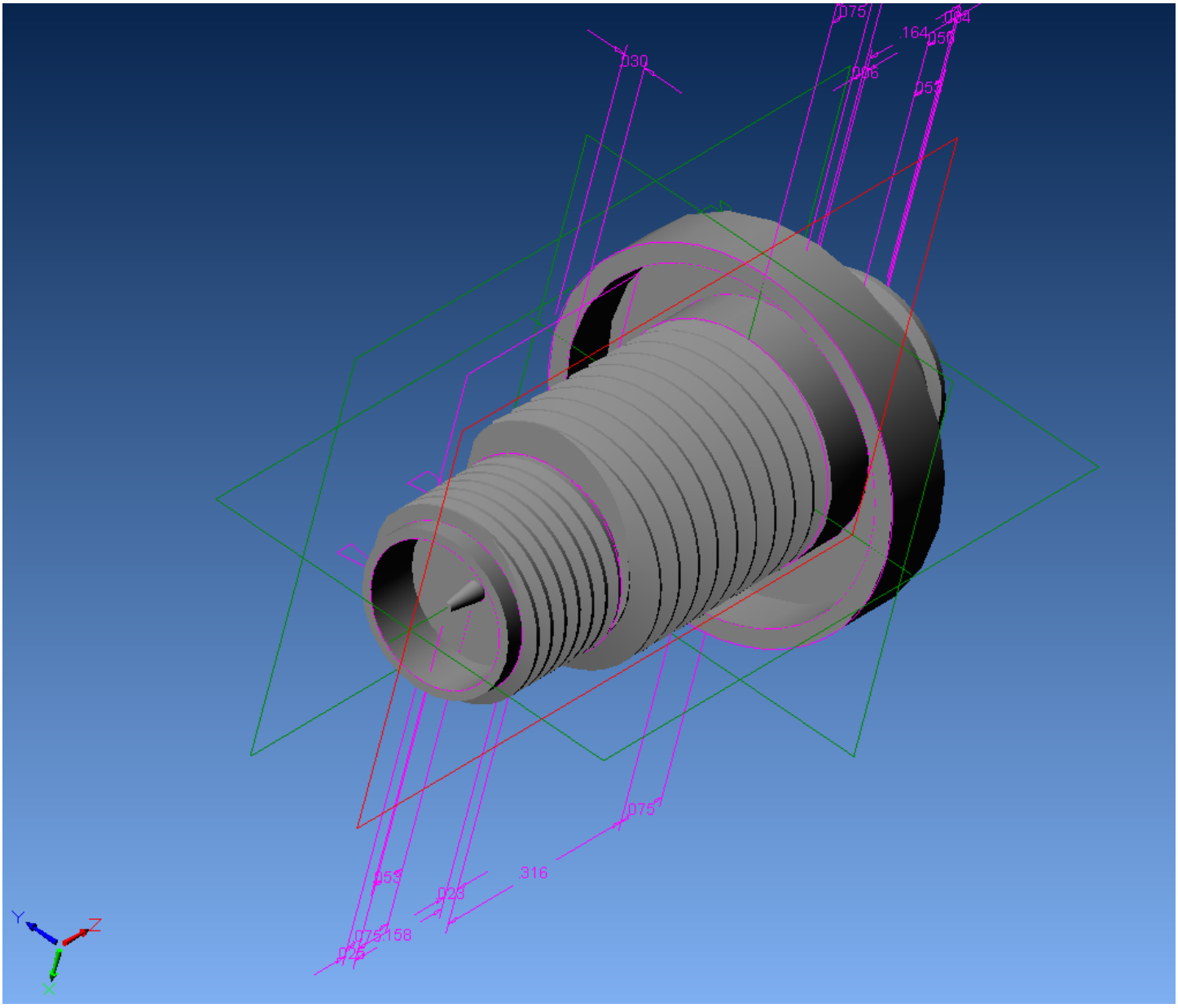

S.M. Electronics L.L.C
SM4992