SMA/F-TNC/F BULKHEAD ADAPTER 18GHZ

SM4742

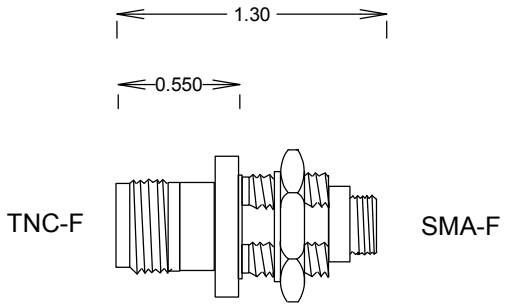

SM4742

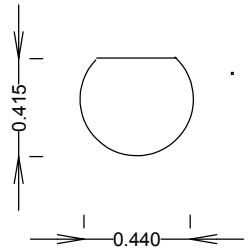

RECOMMENDED
PANEL LAYOUT

SPECIFICATIONS

ELECTRICAL

FREQUENCY: 0-18 GHZ
IMPEDANCE: 50 OHMS
VSWR 1.15 MAX

MECHANICAL

MATERIALS BODY PASSIVATED S. STEEL
MATERIALS CONTACTS BeCu
CONTACT PLATING: Au PER MIL-G-45204
DURABILITY: 500 CYCLES MIN

ENVIRONMENTAL

CORROSION MIL-STD-202
VIBRATION MIL-STD-202
SHOCK MIL-STD-202

ROHS COMPLIANT

FAIRVIEW MICROWAVE INC. ALLEN, TX 75013 WWW.FAIRVIEWMICROWAVE.COM			
TITLE SMA/F-TNC/F BULKHEAD ADAPTER 18GHZ			
SIZE A	CAGE CODE 3FKR5	DWG NO SM4742	REV -
SCALE		SHEET	